Automation
Robohand FERGUSON
CAMCO

INDEXING PRODUCTS

INDEX DRIVES

PARTS HANDLERS

PRECISION LINK CONVEYORS

CAMCO FERGUSON

www.destaco.com

Positioning our customers for productivity.

April
2008

Table of Contents

Quality Policy

Industrial Motion Control, LLC designs and builds motion control components for integrators and users of automation equipment.

Our objective is to serve this industry by providing the ***best value*** in products and services to our customers.

To accomplish this, Industrial Motion Control, LLC is committed to ***continual improvement*** in our overall business performance.

Introduction

Industrial Motion Control, LLC (IMC), headquartered in Wheeling, IL USA, is a leading manufacturer of precision cam-actuated index drives, parts handlers, in-line conveyors and custom cams.

IMC Headquarters
Wheeling, Illinois USA

European Headquarters (Ferguson S.A.)
Braine-le-Château, Belgium

Formed by the merger of Commercial Cam Co. and Ferguson Machine Co., **IMC** offers the widest range of products in the industry. With over **100 years of experience** and significant investments in personnel and capital equipment, IMC is unique in its ability to manufacture a full range of motion control products under the **Ferguson** and **Camco** brands.

Introduction

(continued)

IMC serves designers, builders and users of specialty automation equipment worldwide with manufacturing facilities in both North American and Europe. Sales offices are in North & South America, Asia and Europe.

IMC Headquarters

Industrial Motion Control, LLC
1444 South Wolf Road
Wheeling, IL 60090 USA
Tel: 847-459-5200
Fax: 847-465-3042
E-Mail: mktg@camcoindex.com
www.camcoindex.com

IMC Michigan
550 Forest Avenue
Unit #14
Plymouth, MI 48170
Tel: 734-459-8080
Fax: 734-459-8110

European Headquarters

European Headquarters
Ferguson Co. SA
33 Parc Industriel
B-1440 Braine-le-Château
Belgium
Tel: +32 (0)2 367-1311
Fax: +32 (0)2 366-1891
sales@Ferguson.be

Camco UK Ltd.
432 Perth Avenue
Slough Trading Estates
Slough, Berkshire SL1 4TS
United Kingdom
Tel: +44 (0)1753-786-100
Fax: +44 (0)1753-786-101

Introduction

(continued)

IMC has a full staff of technically trained sales engineers and applications engineers to help select and specify the appropriate components for each specific machine design application. Proprietary software ensures that components are selected to meet the customers' requirements for accuracy, speed, load capacity and life expectancy.

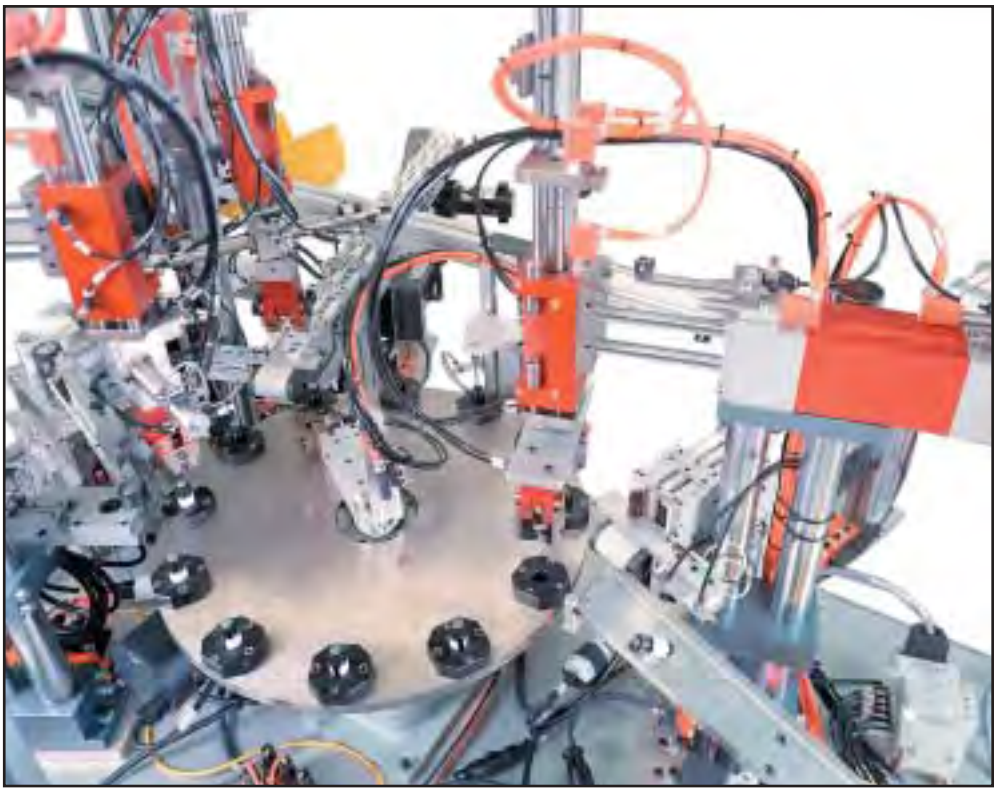

Introduction

(continued)

Industrial Motion Control provides:

- **Quality**. Our manufacturing plants adhere to ISO-9001:2000 standards in all manufacturing and business functions. Our CNC milling and grinding equipment is state-of-the-art.
- **Value.** Through superior product design and investment in the best production equipment and facilities both in North America and Europe.
- **Service.** IMC provides application engineering assistance as well as in-field service and repair. Our delivery lead times are very competitive, supporting customers who demand short lead times to facilitate overall lead times for turnkey automation equipment projects. With sales and service facilities in various locations throughout the world, IMC can support your equipment wherever it is installed.

Solutions in Motion™

Engineering

INDUSTRIAL MOTION CONTROL, LLC.

CAMCO FERGUSON

Model	Weight (lbs)	Weight (Kg)
250P	18	8
387P	55	25
512P	135	61
662P	430	195
900P	750	340
1200P	1,100	499
1800P	3,000	1,361
2200P	20	9

$$C = \frac{C_a}{5.5280} \text{ or } C = \frac{1}{1 - 0.24F^{0.75}}$$

Input Gear Ratio

$G_i = N_{motor} / N_{driveshaft} = N_w/N_i$

Output Gear Ratio

$G_{output} / G_{driven} = D_i/D_n$

Foreword

Cam-actuated motion control is a specialized business. In a 4 to 5-year university curriculum for mechanical engineering, most students spend only a few weeks studying cams and their related mechanisms. In addition to continuing academic research, many advances in cam technology have been made by companies and employees involved in the commercial application of these products. This engineering section provides the basic concepts necessary for machine designers to wisely choose the best cam solutions for their application.

There are some good publications available to the general public for those seeking a more in-depth understanding of the subject. Three that we can recommend are Clyde H. Moon's "Cam Design Manual for Engineers, Designers, and Draftsmen", published by Emerson Electric Co., Harold A. Rothbart's book, "Cam Design Handbook" published by McGraw-Hill and Robert L. Norton's book "Cam Design and Manufacturing Handbook" published by Industrial Press. Mr. Moon's book is available in Adobe Acrobat® PDF format on the IMC web site and can be easily downloaded at **www.camcoindex.com**.

We would like to thank all of the IMC employees and IMC manufacturer representatives that have contributed to our extensive cam knowledge base and helped collect the information presented in this catalog.

Introduction

Industrial Motion Control, LLC is a joint-venture company formed in 2001 between Ferguson Machine Co. and Commercial Cam Co., also known as Camco.

Ferguson has been in continuous operation since 1930, with European operations established in 1961. Camco was established in 1939, first manufacturing the copper coils required for the then-emerging residential and commercial air-conditioning and refrigeration industries. Camco needed cam-actuated machinery to produce these products and eventually the business focused on the commercialization of cam-operated machinery, index drives and custom cams.

As divisions of larger, Fortune 500 companies, both Ferguson and Camco were able to invest in substantial amounts of equipment and facilities while developing a diverse line of products that include **index drives, custom cams, parts handlers, precision-link conveyors and servo-motor drive systems**.

Today, as IMC, Ferguson and Camco are the world's largest producer of cam-actuated index drives, utilizing state-of-the-art production equipment to provide the highest quality cam-actuated and servo motor-actuated motion control products available.

Solutions in Motion™

Choosing the proper type and size of index drive can be complicated. Over the years, IMC has developed a wealth of experience in selecting and applying the optimum product solutions to a wide variety of applications. IMC application engineers, sales engineers, catalog information and proprietary software all combine to make the task less daunting. This engineering section will help eliminate much of the mystery behind high-performance indexing and its application in specialty machinery design.

What is Indexing?

Indexing can be linear or rotary. As defined by IMC, indexing is the process of starting and stopping in precise intervals at precise locations.

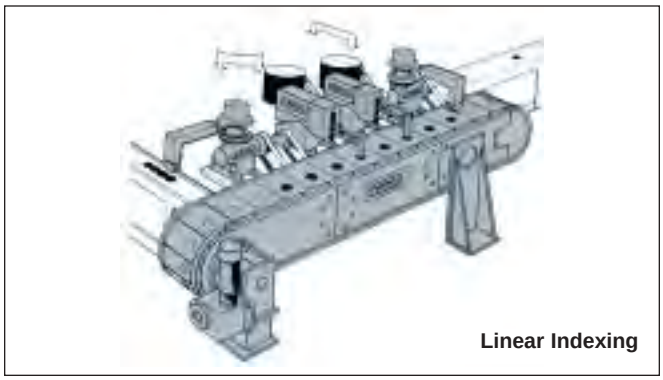

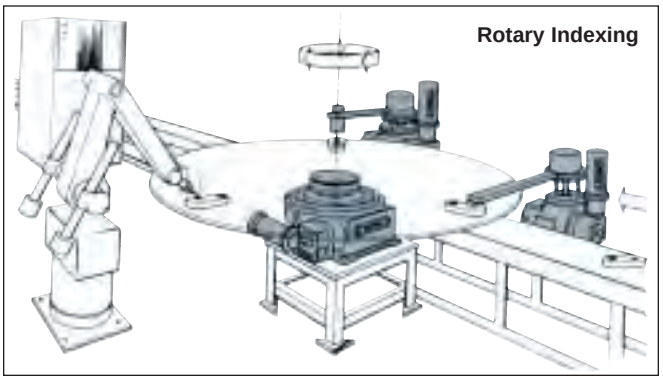

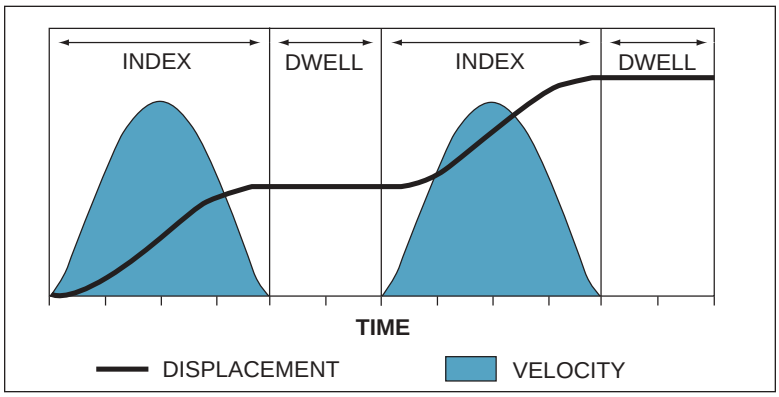

Why Cam-Actuated Index Drives?

The advantages of cam-controlled motion are obvious and effectively demonstrated in everyday life by the camshaft found in automobile engines. No other technology can provide comparable **speed, precision, repeatability, load capability and reliability**.

Cam-driven mechanisms require little or no maintenance and are capable of moving, with precision, a wide variety of products and components. For example – larger E-Series Index Drives rotate *several tons* of automotive body parts in seconds – and smaller P-Series and RG-Series index drives accurately index pharmaceutical components and electronic components in *milliseconds*. The mechanical technology typically requires no maintenance, other than routine checks for proper lubrication. Rolling pre-loaded contact between the cams and cam followers minimize wear and thermal inefficiencies. This preloading technique is also used on the input and output bearings of the index drive, achieving the most rigid, accurate and efficient mechanical actuator possible. With this inherent rigidity, settling time (the time to dampen any vibrations) in dwell is short or virtually non-existent — very important for many applications requiring a combination of speed and precise positioning.

Through careful design of the cam profile, velocity and acceleration are also controlled throughout the indexing cycle, minimizing vibration and providing a known, repeatable displacement-time relationship.

In summary, cam-operated indexing systems have the following features and benefits:

- Controlled Acceleration and Decelerations
- Repeatable, Accurate Positioning
- High Load Capacity
- High Speed Capability
- Smooth Motion
- Quick Settling Time in the Dwell Position
- Low Maintenance, Superior Life
- Known Displacement-Time Relationship
- Known Power Requirement

Types of Motions

Controlled Indexing is comprised of three sections or phases: **acceleration, peak velocity** and **deceleration**. To optimize the transition from one phase to the next, several standard motion profiles have been developed. They include **Cycloidal, Modified Sine** and **Modified Trapezoidal**. In special circumstances, the motion required calls out for certain positions and/or velocities at certain times in the index cycle. Special **Polynomial** curves can be constructed for these applications. In other applications, the peak velocity needs to match the velocity of another component of the machine – and variations of Polynomial and Modified Sine curves can be customized to suit the requirements.

IMC usually employs Modified Sine curves due to their smooth transition from peak acceleration to deceleration and smooth power demand curves. Frequently, a period of peak, constant velocity is needed due to cam design or machine design requirements and a variation of this motion curve, **Modified Sine Constant Velocity** (abbreviated "msc"), is used.

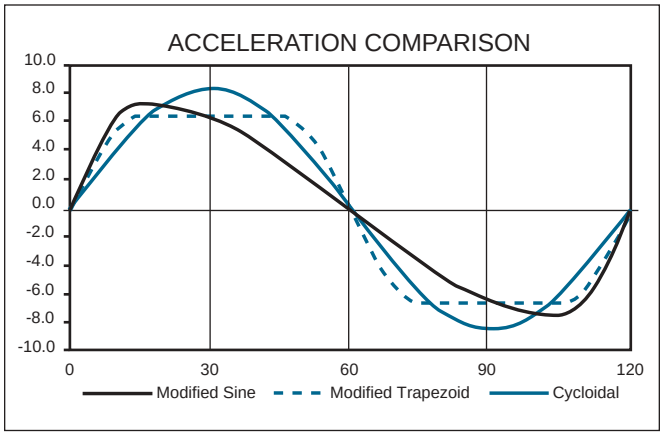

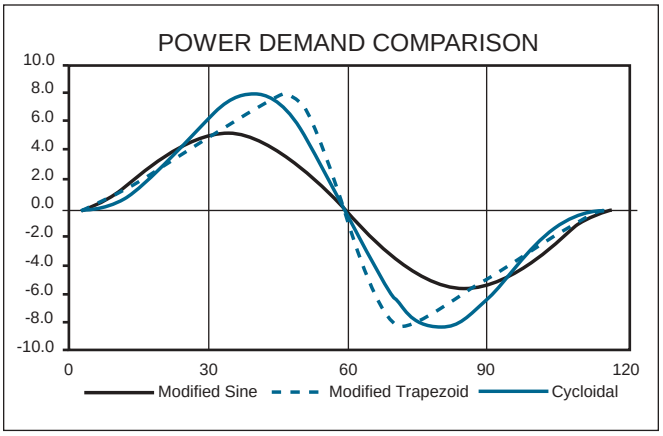

In addition to those motions already described, IMC also has several other special application motions. They include **Modified Sine Quick Return (MSQR)** and **Synthesized Modified Sine Harmonic (SMSH)**. **MSQR** is an oscillating motion with no dwells. It has a forward stroke with a matched peak velocity and a quick return stroke. It is used in applications where a constant speed conveyor or rotating dial is tracked (velocity is synchronized) in order to perform work during the synchronized movement. Examples are printing or moving a saw or cutting blade to cut parts to size. **SMSH** is a motion used in oscillating applications that require a dwell at one end of the stroke and no dwell at the other. This motion reduces the number of acceleration reversals. Please contact your local IMC sales representative or IMC application engineer for further details.

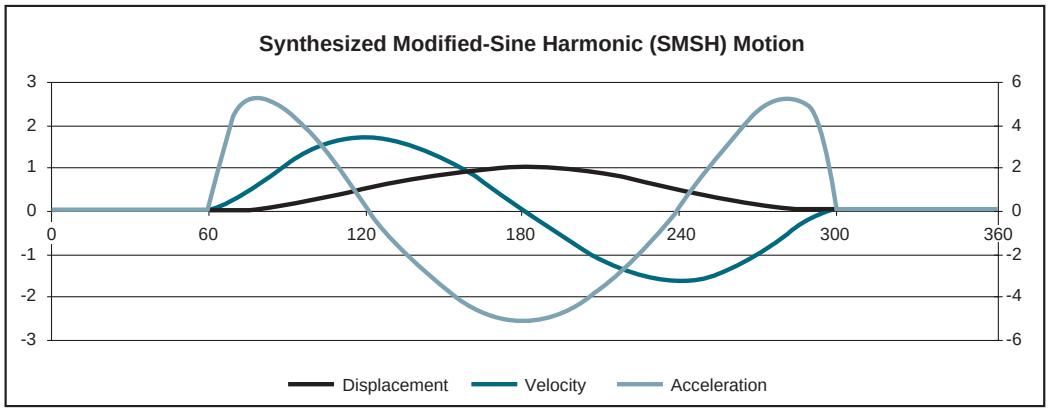

Types of Index Drives

IMC manufactures all three types of index drive geometries: **Roller Gear, Right Angle, and Parallel.**

Roller Gear

This family of indexers uses a globoidal cam in conjunction with followers mounted radially outward from the circumference of the follower wheel, much like the teeth of a gear. The input shaft is perpendicular to the output shaft. With this right angle configuration, it is possible to provide an optional large through-hole along the axis of the output shaft, or design a large output flange to accept dials (dial mounting). Large cam diameters relative to the output follower wheel allow for a wide rande of special motions, short motion periods and a large output displacement for relatively smaller input displacement. In summary, **Roller Gear** Indexers provide:

- Compact Low Profile Design
- Flanged Output Capability for Dial Mounting Applications
- Through-Hole Capability (for electric and pneumatic lines or stationary center post)
- Motion Flexibility (special and complex motions) due to relatively large cam
- 2 to 24 Stop Range

Right Angle

This family of indexers uses a cylindrical or barrel cam in conjunction with followers mounted parallel to the axis of the output. Similar to the Roller Gear, the input shaft is perpendicular to the output shaft. The cam is tucked partially underneath the output wheel, offering a more compact arrangement. For a given torque requirement, Right Angle indexers usually occupy the least amount of floor space and volume. IMC production equipment allows us to produce very large index drives in this geometry. Control of the cam rib thickness allows for preloading. Center distances between input shaft and output shaft can be fixed accurately. The minimum cam rib requirements limit the range of motions (output motions as a function of input motion) when compared to Roller Gear indexers. In summary, **Right Angle** Indexers provide:

- Most Compact Design for Given Output Capacity
- Fixed Center Distance Between Output and Input Shafts (tighter tolerance on the distance between input and output shafts)
- Flanged Output Capability for Dial Mounting Applications (E-Series & RAD Series)
- Through-Hole Capability (E-Series & RAD series)
- 3 to 24 Stop Range
- Very Large Index Drives for Automotive Assembly and Large (up to 40 feet) Dial Diameters

Types of Index Drives

(continued)

Parallel

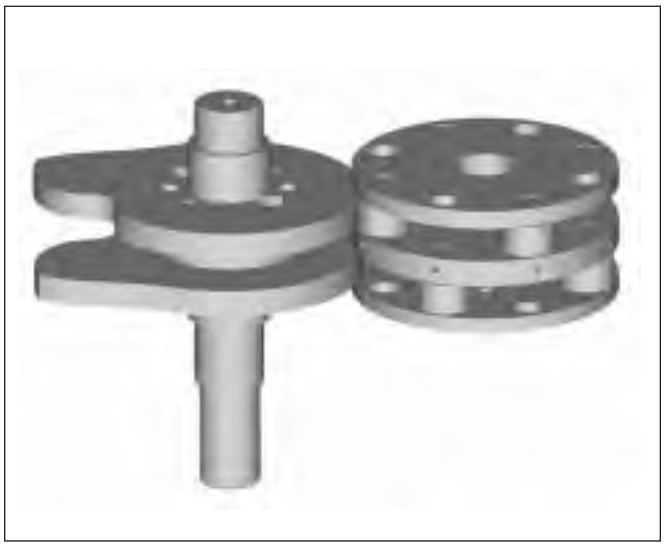

This family of indexers use a pair of conjugate plate cams with yoke-mounted followers mounted parallel to the axis of the output. The input shaft is parallel to the output shaft. With this parallel configuration, there are no ribs on the cam as found on Roller Gear and Right Angle indexers. Also unique to the Parallel family is no reversal of the cam followers. Since they rotate in the same direction throughout the index cycle, index rates of over 1000 indexes per minute are possible. Without minimum rib requirements (no rib), larger followers can be used, providing high torque capability. Parallel indexers produce high output displacements for relatively smaller input displacements. The yoke-mounted geometry also makes the Parallel family more resistant to shock loading (more robust). Double output shafts are also available. In summary, **Parallel** Indexers provide:

- High Speed Capability (with Non-Reversing Followers)
- High Load Capability (with Oversized Followers)
- Shock Resistance (More Robust)
- Motion Flexibility (special and complex motions) due to conjugate cam geometry
- 1 to 8 Stop Range

Model Code Designation

Camco Model Code Designation

Number of Stops

663RAD 6 H36-180

Model

Cam Follower diameter in 32nds of an inch (H36 = 1.125")

Index Period

For Indexers Only

Ferguson Model Code Designation

Model

Index Period

FD162F 8/2 F100-90

Number of Stops (8/2 = 4 stops)

Cam Follower diameter in 100ths of an inch (F100 = 1")

For Indexers Only

Approach to Sizing Index Drives

Within each family type (**Roller Gear, Right Angle, Parallel**), IMC offers more than a dozen different sizes of index drives. The first consideration when choosing an **index drive type** is mounting requirements and the geometry of the driven member. The mounting requirements usually determine the type of indexer and then size is selected. Often the geometry (size of dial, for example) helps determine the initial choice. The **index drive size** is verified through data sheet calculations.

All IMC indexers are designed and rated to have a $\mathbf{B_{10}}$ life of 8,000 hours on the followers and over 100,000 hours on the other major components. The $\mathbf{B_{10}}$ life is an estimate of time between cam follower replacement. For example, a $\mathbf{B_{10}}$ life estimate of 15,000 hours means that we can expect 10% of the followers to begin to show wear after 15,000 hours of operation. For this case, IMC would recommend replacing all of the followers after 15,000 hours of continuous operation.

Many helpful software programs have been developed by IMC to assist with the selection process. The following examples will show both a manual method of calculating and a faster method using special software.

All sizing for rotating equipment (motors, gear reducers and indexers) rely on the basic Newtonian Mechanics equation:

$$\text{Torque} = T_i = I\,\alpha$$

Where **I** is the Rotational Mass Moment of Inertia and α is the peak angular acceleration (radians/sec^2).

Additional work or friction torque is also added, giving the full equation:

$$T_{Total} = I\,\alpha + T_w$$

Where T_w = Work Torque = μ x R x F

μ = coefficient of friction, **R** = radius to Work Force and **F** = Force

For smaller diameter dial applications, Work Torque is negligible. For larger diameter dial applications, Work Torque can be significant. The inefficiencies of speed reducers also add to the total Work Torque.

After Torque is calculated we then determine the power requirements through:

$$\text{Power} = T \times \omega = I \times \alpha \times \omega$$

Where $\boldsymbol{\omega}$ is the rotational velocity (radians/sec). Note that with an indexing application, $\boldsymbol{\alpha}$ and $\boldsymbol{\omega}$ are a function of time or $\boldsymbol{\alpha}$ = f(t) and $\boldsymbol{\omega}$ = f(t).

Since **I** is usually constant, power peaks when the <u>product</u> of $\boldsymbol{\alpha}$ and $\boldsymbol{\omega}$ peak. Software automatically chooses this peak product, and the manual data sheet methods rely on $\mathbf{K_i}$ and $\mathbf{K_f}$ factors to determine peak power. $\mathbf{K_i}$ and $\mathbf{K_f}$ are explained later in this Engineering catalog section.

Input (camshaft) torque requirements are calculated through the conservation of energy equation, Power in = Power out, or:

$$T_{in} \times \omega_{in} = T_{out} \times \omega_{out}$$

$$\text{Restated, } T_{in} = T_{camshaft} = T_c = T_{out} \times \omega_{out} / \omega_{in}$$

Note that:

$K_i \equiv \omega_{out} / \omega_{in}$ at peak value of the product of $\alpha_{out} \times \omega_{out}$ so we have:

$$T_{c(inertia)} = T_{inertia\ out} \times K_i \text{ (for inertia)}$$

Similarly,

$$T_{c\ (work)} = (T_{work\ out} + T_{friction\ out}) \times K_f$$
(for friction and work torque)

Where $K_f \equiv \omega_{out} / \omega_{in}$ at ω_{out} (maximum).

Total Camshaft Torque

$$T_c = T_{c(inertia)} + T_{c(work)}$$

Horsepower is calculated based on Camshaft Torque and Speed

$$\text{Power} = HP = \frac{T_c \times N}{63025 \times E} \text{ (Horsepower)}$$

Where **N** = Camshaft speed in RPM

E = Efficiency of the gear reducer

$\mathbf{T_c}$ is in units of in-lbs.

Derivation of Torque Demand Equation for Indexing Dials

Inertia Torque, $\mathbf{T_i}$, is defined by:

$$T_i = I\,\alpha$$

Where **I** = Rotational Mass Moment of Inertia (in-lb-sec^2)

α = Peak angular acceleration (radians/sec^2)

From the "Cam Design" manual by Mr. Clyde H. Moon:

$$\alpha = C_a \frac{\theta_O}{t_2^2}$$

Where $\mathbf{C_a}$ = Acceleration Coefficient (5.528 for modified sine motion)

$\mathbf{\theta_O}$ = Output Angle or Angle of Index (radians)

$\mathbf{t_2}$ = Index time (seconds)

The Output Angle, θ, is calculated based on the number of stops

$$\theta_O = \frac{2\pi}{S}$$

Where **S** = Number of stops

If the modified sine motion has constant velocity the acceleration factor, $\mathbf{C_a}$, must be modified by a ratio of the $\mathbf{C_a}$ for the constant velocity relative to the $\mathbf{C_a}$ for a modified sine motion without constant velocity.

$$C = \frac{C_{a(cv)}}{C_a}$$

A service factor, SF, of 1.3 is added into the equation

Substituting, acceleration becomes

$$\alpha = \frac{C_a \times C \times SF \times 2\pi}{S \times t_2^2}$$

IMC calculates weight moment of inertia and then converts to mass moment of inertia:

$$I = \frac{Wk^2}{g}$$

Where $\mathbf{Wk^2}$ = Weight Moment of Inertia (lb-in^2)

g = Acceleration due to gravity (386.4 in./sec^2)

The final torque equation is then

$$T_i = \frac{Wk^2}{g} \quad \frac{C_a \times C \times SF \times 2\pi}{S \times t_2^2}$$

Substituting the constants

$$T_i = \frac{Wk^2 \times 5.528 \times C \times SF \times 2\pi}{386.4 \times S \times t_2^2}$$

$$T_i = \frac{.09 \times SF \times Wk^2 \times C}{S \times t_2^2}$$

With a 1.3 service factor, the Inertia Torque Demand Equation is:

$$T_i = \frac{.117 \times Wk^2 \times C}{S \times t_2^2} \quad \text{(in.-lbs.)}$$

We will use a dial and conveyor application to illustrate.

Type I and Type II Indexers Explained

Some index drives produce two indexes for every one rotation of input shaft. This is due to the geometric constraints of certain motion period and output displacement combinations. If there is a double index, we call this a **Type II indexer** (and M = 2). If there is only one index per revolution of input camshaft, we call this a **Type I indexer** (and M = 1). **Type I indexers are more common**. If IMC has a Type II indexer with a "270 degree motion period", the first index is achieved with 135 degrees of real input camshaft rotation (270 / 2 = 135°).

Dial Application Example

Number of Stations	(S)	6
Weight of Single Station	(W_s)	5 lbs.
Radius to Station Center	(R_s)	10 in.
Dial Plate Diameter	(D_d)	24 in.
Dial Plate Weight	(W_d)	33.6 lbs.
Dwell Time	(t_1)	2 sec.
Index Time	(t_2)	0.5 sec.

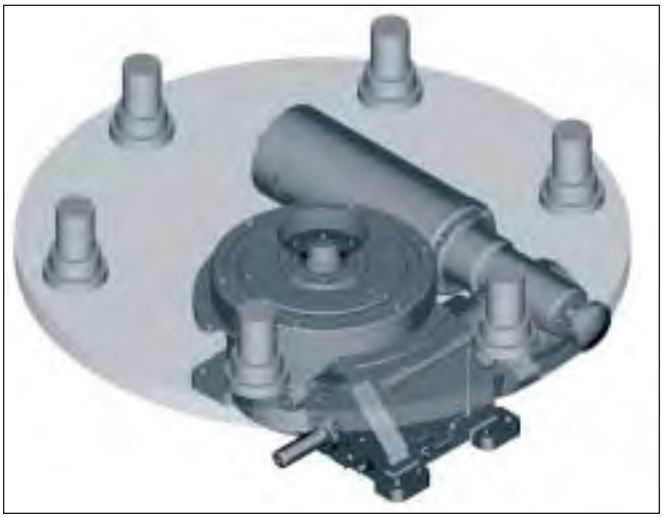

Since dwell time is more then 3 times greater then the index time, the application will be cycle-on-demand.

Dial Example

Index Period

β = 270° Since this is cycle-on-demand, choose a long, standard motion period.

Index Rate

$$N = \frac{\beta}{6 \times t_2} = \frac{270}{6 \times 0.5} = 90 \text{ index/min.}$$

Inertia Loading

Dial Plate Inertia

$$W_d \times \frac{D_d^2}{8} = 33.6 \times \frac{24^2}{8} = 2419 \text{ lb.-in.}^2$$

Station Inertia

$$W_s \times S \times R_s^2 = 5 \times 6 \times 10^2 = 3000 \text{ lb.-in.}^2$$

Total Wk^2 External

$$(Wk^2_{(ext.)}) = 2419 + 3000 = 5419 \text{ lb.-in.}^2$$

Preliminary Output Torque

$$T_i = \frac{.09 \times SF \times Wk^2_{(ext.)}}{S \times t_2^2} = \frac{.09 \times 1.3 \times 5304}{6 \times .5^2}$$

$$= 423 \text{ in.-lbs.}$$

The model 601RDM6H24-270 with a 4.0D overload clutch is the preliminary selection. B_{10} capacity is 5625 in-lbs. @ 50 index/min. Indexer internal inertia is 110 lbs.-in.^{2} and the overload clutch inertia is 69 lbs.-in.^{2}.

Correcting B_{10} @ 50 to B_{10} @ 90 to obtain the capacity at the required operating speed of 90 index/minute.

$$B_{10} @ 60 = B_{10} @ 50 \times \left(\frac{50}{90}\right)^{0.3}$$

$$= 5625 \times \left(\frac{50}{90}\right)^{0.3}$$

$$= 5326 \text{ in.-lbs.}$$

Inertia Torque Calculation

The following formula includes a safety factor of 1.3.

$$T_i = \frac{.09 \times SF \times (Wk^2_{(ext.)} + Wk^2_{(int.)})}{S \times t_2^2}$$

$$= \frac{.117 \times (5419 + 110)}{6 \times .5^2}$$

$$= 431 \text{ in.-lbs.}$$

Camshaft Torque

$$K_f = \frac{C_v \times 360 \times M}{\beta \times S} = \frac{1.7596 \times 360 \times 1}{270 \times 6} = 0.391$$

$$K_i = 0.56 \times K_f = 0.56 \times 0.391 = .219$$

$$T_c = T_i \times K_i = 431 \times .219 = 94 \text{ in.-lb.}$$

Note: $C_v \equiv$ Velocity coefficient for modified sine motion.

Dial Example

(continued)

Camshaft RPM

$$N_c = \frac{\beta}{6 \times t_2 \times M} = \frac{270}{6 \times .5 \times 1} = 90 \text{ RPM}$$

Where M=1 for Type 1 indexers (see p. A-14)

Reducer Selection

Assuming an 1800 RPM motor speed, the model R180 reducer with a 20:1 reduction ratio is selected.

Horsepower

$$Hp = \frac{T_c \times N_c}{63{,}025 \times E} = \frac{94 \times 90}{63{,}025 \times .85} = 0.16 \text{ Hp}$$

Due to component compatibility and horsepower requirements, a 1/3 horsepower motor is selected for this application.

Dial Example Using IMC Software

With the advent of user-friendly, Windows-based software, we can input the data and quickly get the results. The program takes into account additional factors such as internal friction and cam stresses for more precise calculations. Shown below are the input screens and output screens for the same dial application:

Dial Application Input Screen

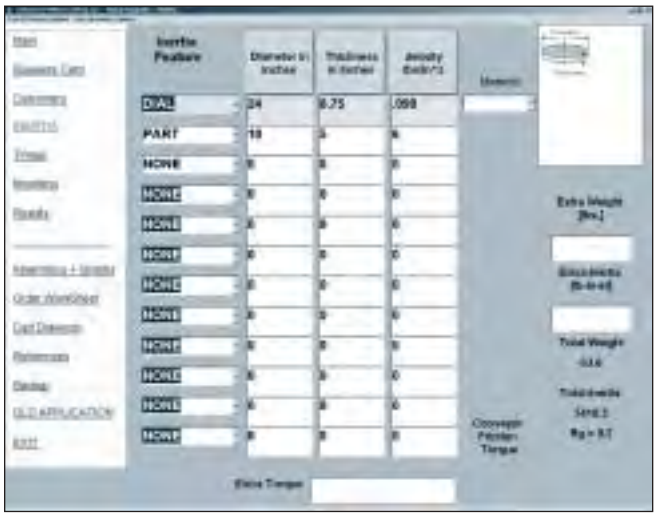

Dial Application Results Screen

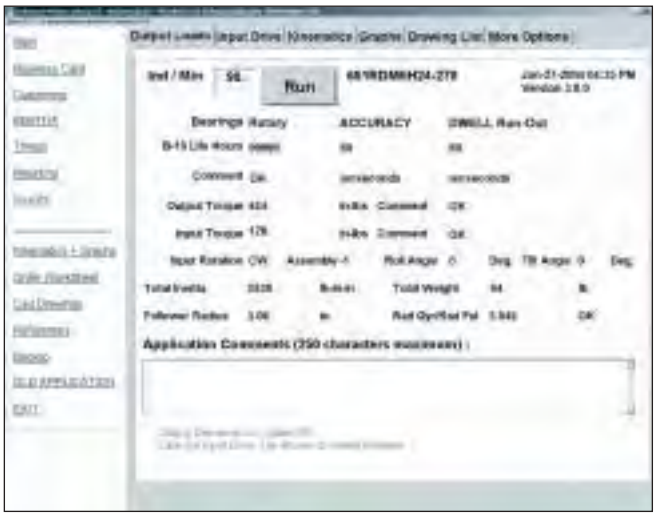

Conveyor Application Example

Over/Under Precision Link Converter

Index Distance	(S_x)	3.00 in.
Index Time	(t_2)	0.375 sec.
Dwell Time	(t_1)	3.0 sec.
Sprocket Pitch Dia.	(D_s)	7.8394 in.
Sprocket Weight	(W_{ds})	18.0 lbs.
Number of Teeth on Sprocket	(n)	8
Indexed Parts Weight	(W_p)	64 lbs.
Chain & Fixture Weight	(W_c)	128 lbs.
Coefficient of Friction	(μ)	0.3
Chain Pitch	(p)	3.0 in.

Conveyor Example

Index Period

For this cycle-on-demand application, the index period should be 270°, or larger.

Calculating the number of stops.

$$S = \frac{n \times p}{S_x} = \frac{8 \times 3}{3} = 8$$

For cycle-on-demand applications, the index rate for a continuous run should be used for indexer selection.

$$N = \frac{\beta}{6 \times t_2} = \frac{270}{6 \times .375} = 120 \text{ index/min.}$$

Inertia Calculations

Drive Sprocket

$$W_{ds} \times \frac{D_s^2}{8} = 18 \times \frac{7.8394^2}{8} = 138 \text{ lb.-in.}^2$$

Note: Most IMC Precision Link Conveyors use a chordal compensation cam at the take-up end. No take-up sprocket is necessary.

Chain and Fixtures

$$W_c \times \frac{D_s^2}{4} = 128 \times \frac{7.8394^2}{4} = 1967 \text{ lb.-in.}^2$$

Parts

$$W_p \times \frac{D_s^2}{4} = 64 \times \frac{7.8394^2}{4} = 983 \text{ lb.-in.}^2$$

External Inertia

$$Wk^2_{(ext.)} = 138 + 1967 + 983 = 3088 \text{ lb.-in.}^2$$

Preliminary Inertia Torque

$$T_i = \frac{.09 \times SF \times Wk^2_{(ext.)}}{S \times t_2^2} = \frac{.09 \times 1.3 \times 3088}{8 \times .375^2}$$

$$= 321 \text{ in.-lbs.}$$

The equation used to calculate T_i includes a service factor of 1.3

Friction Torque

$$T_f = (W_c + W_p) \times \frac{D_s}{2} \times \mu = (128 + 64) \times \frac{7.8394}{2} \times 0.3 = 226 \text{ in.-lbs.}$$

Work Torque

The parts are being translated horizontally, therefore there is no work torque.

Preliminary Output Torque

$$T_o = T_i + T_f + T_w = 321 + 226 + 0 = 547 \text{ in.-lbs.}$$

Using the appropriate catalog section, select an index drive corresponding to the preliminary torque requirements.

$$B_{10} = \frac{T_o}{\left(\frac{50}{N}\right)^{0.3}} = \frac{547}{\left(\frac{50}{120}\right)^{0.3}} = 711 \text{ in.-lbs.}$$

Select 401RA8H24-270, modified sine motion (ms), $Wk^2_{(int.)}$ = 15 lbs.-in.^{2}, B_{10} capacity = 1463 in.-lbs.

Conveyor Example

(continued)

Overload Protection

Output overload protection should be used with this application. A large instantaneous gear ratio at the start of index makes output overload protection the preferred method for protecting the index drive. With an output overload clutch, jams or overloads at the start of index can easily be detected prior to damaging the indexer.

From your IMC indexer catalog, select the appropriate clutch model for the index drive being used. Clutch model 2.3FC-SD with $Wk^2_{(cl.)}$ = 31 lbs.-in.^{2} is chosen.

Inertia Torque

The actual inertia torque including indexer internal inertia and clutch inertia can now be calculated.

$$T_i = \frac{.09 \times SF \times (Wk^2_{(ext.)} + Wk^2_{(int.)} + Wk^2_{(cl.)} \times C}{S \times t_2^2}$$

$$= \frac{.09 \times 1.3 \times (3088 + 15 + 31) \times 1}{8 \times .375^2}$$

$$= 326 \text{ in.-lbs.}$$

Output Torque

$$T_o = T_i + T_f + T_w = 326 + 226 + 0 = 552 \text{ in.-lbs.}$$

C, K_i and K_f

Values for C, K_i and K_f can be calculated or found in the table on page A-19.

$$C = 1.0,\ K_i = 0.16,\ K_f = 0.29$$

Camshaft Torque

$$Tc = (T_i \times K_i) + (T_f \times K_f) + (T_w \times K_f)$$

$$= (326 \times 0.16) + (226 \times 0.29) + 0$$

$$= 118 \text{ in.-lbs.}$$

Camshaft RPM

$$N_c = \frac{\beta}{6 \times t_2 \times M} = \frac{270}{6 \times .375 \times 1} = 120 \text{ RPM}$$

This is a type 1 unit, therefore M = 1.
For type 2 or 3, M = 2, M = 3.

From the Right Angle Series indexer catalog section, an R225 reducer with a 15:1 reduction ratio is chosen.

Horsepower

$$Hp = \frac{T_c \times N_c}{63{,}025 \times E} = \frac{118 \times 120}{63{,}025 \times .75} = 0.30 \text{ Hp}$$

Due to component compatibility and horsepower requirements, a one horsepower motor is chosen for this application.

Conveyor Example Using IMC Software

As demonstrated for the dial application, we can input the conveyor data into the software program and quickly get results. Shown below are the input screens and output screens for the conveyor application:

Conveyor Example Input Screen

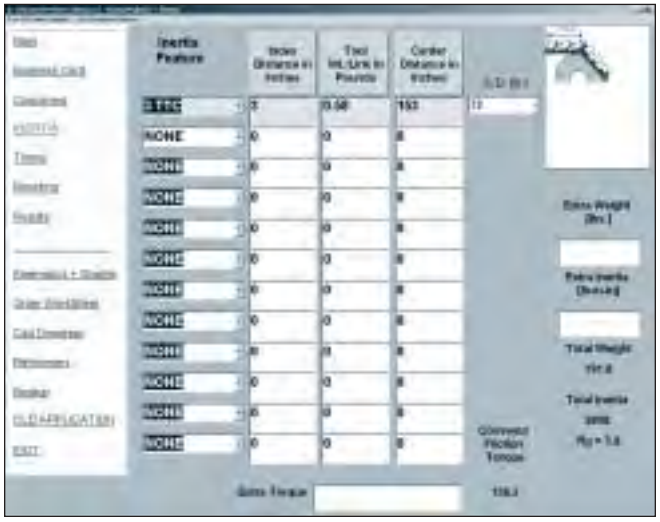

Conveyor Example Results Screen

Brief Oscillator Example

IMC software can handle a variety of slider-crank, scotch yoke and 4-bar mechanisms.

Slider Crank Linkage Example

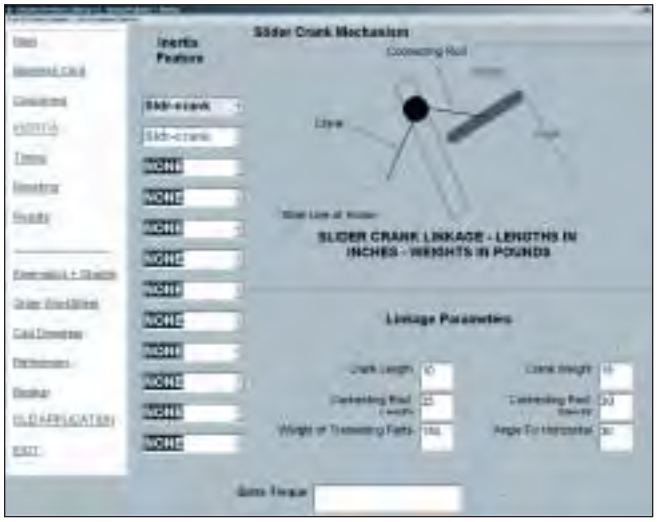

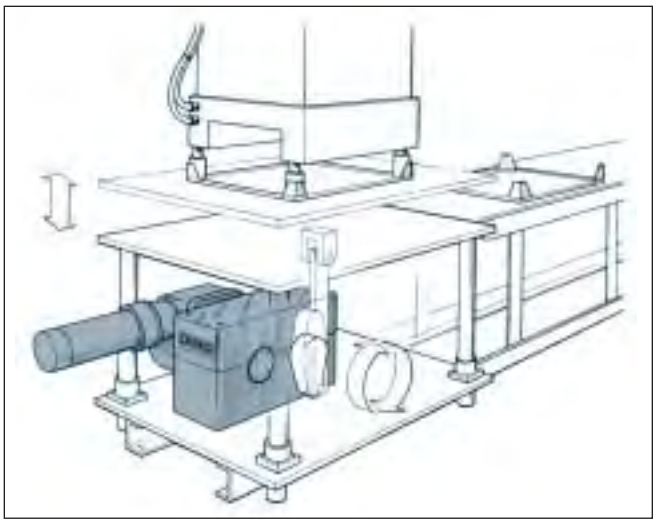

Servo-Mechanical Example

Camco-Ferguson software can also be used to size servo-driven indexers such as the Flex-i-Dex and Indexers with constant-lead cams. The following illustrations show input and output data for a typical servo-driven application.

Flex-i-Dex Constant Lead Indexer

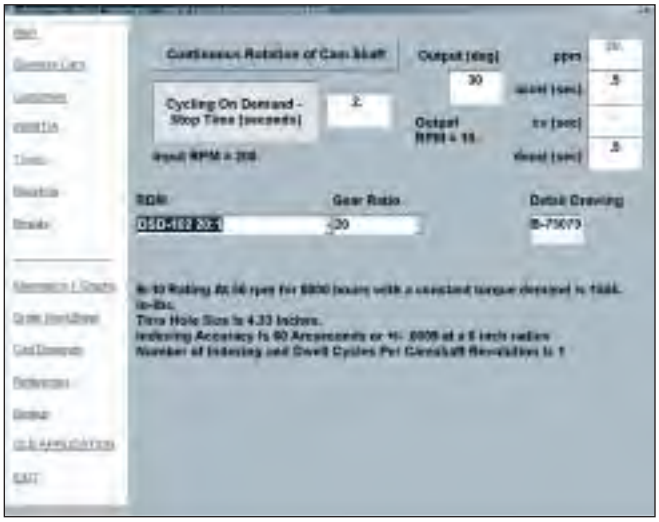

Servo Application Input Screen

Servo Application Output Screen

Cycle-On-Demand vs. Continuous Running Applications

If the input shaft (camshaft) of an index drive runs continuously, the ratio of the index time and stop (dwell) time are fixed and a function of the number of degrees on the cam that impart motion to the output shaft (motion period).

If $\mathbf{t_1}$ is the dwell time and $\mathbf{t_2}$ is the index time, total time $t_t = t_1 + t_2$

Typically, the motion period of the cam is rarely less than 90 degrees, due to the geometry constraints of cam design. To illustrate, let's choose a 90 degree index period ($\boldsymbol{\beta_2}$), leaving 270 degrees ($\boldsymbol{\beta_1}$) for dwell time (90° + 270° = 360° total).

Assume 60 RPM camshaft or **N** = 60.

Then

$$\beta_{total} = 360° = 6 \times N \times t_{total} \text{ or}$$

$$t_{total} = \frac{360}{6N} = \frac{360}{6 \times 60} = 1 \text{ sec.}$$

The index time

$$t_2 = \frac{\beta_2}{6N} = \frac{90}{6 \times 60} = 0.25 \text{ sec.}$$

And dwell time

$$t_1 = \frac{\beta_1}{6N} = \frac{270}{6 \times 60} = 0.75 \text{ sec.}$$

Note $t_t = t_1 + t_2 = .75 + .25 = 1.0$ sec.

In this example the ratio of dwell time to index time is .75 sec / .25 sec or 3:1.

Suppose you need more time for dwell, due to the manufacturing process required of the machine. You can then stop the camshaft in dwell for a specified amount of time, and then re-start the camshaft. This is known as cycle-on-demand. Example: You want to index in 0.25 seconds, but stay in the dwell position for 10 seconds. By using a brake motor (or motor with clutch-brake module), you stop the camshaft and then restart after the required 10 seconds. By rotating the camshaft at 60 RPM when the motor is engaged, you achieve the desired 0.25 index time. These two charts illustrate and summarize the two concepts:

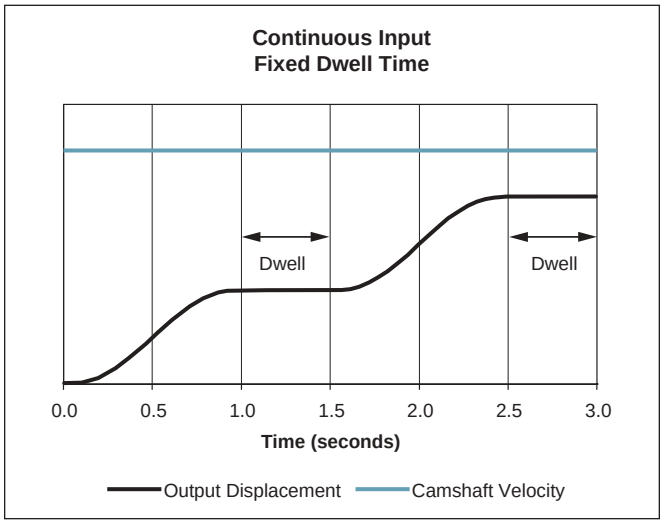

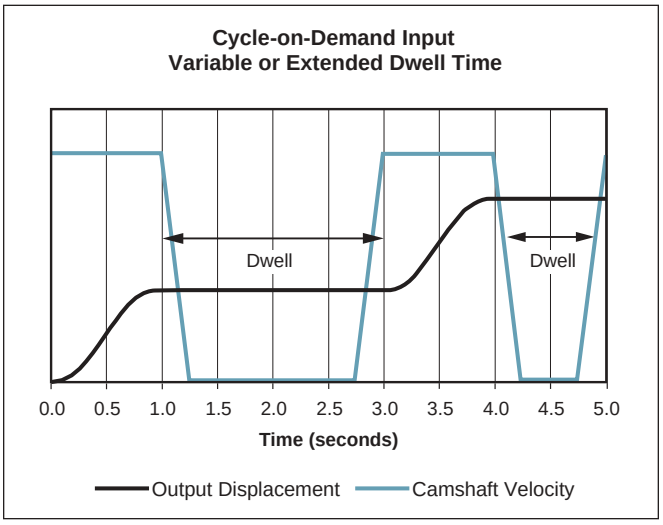

Important Formulas

Refer to page A-16 for Nomenclature

Torque Due to Inertia

$$T_i = \frac{.09 \times SF \times (Wk^2_{(ext.)} + Wk^2_{(int.)} + Wk^2_{(cl.)}) \times C}{S \times t_2^2}$$

Torque Due to Friction (dial application)

$$T_f = (^1/_2 W_d + W_s) \times R_\mu \times \mu$$

Where $\mathbf{W_d}$ = Dial Weight
$\mathbf{W_s}$ = Total weight of the stations
$\mathbf{R_\mu}$ = the radius where rollers or support bearing contact the dial plate
μ = coefficient of friction

Torque Due to Work

$$T_w = W_w \times R_w$$

Where $\mathbf{W_w}$ = work force or work load
$\mathbf{R_w}$ = radius at which the force is acting, perpendicular to the axis of rotation

Total Output Torque

$$T_t = T_i + T_f + T_w$$

Camshaft Torque

$$T_c = T_i \times K_i + (T_f + T_w) \times K_f$$

Relationship between cam angle, time and RPM:

$$\beta = 6 \times N \times t \times M$$

where β (degrees), N (RPM), t (sec.), M (unitless)

or $N = \beta / (6 \times M \times t)$

Factor for calculating camshaft torque due to inertia at indexer output, for modified sine motions:

$$K_i = 0.56\ K_f$$

Factor for calculating camshaft torque due to friction and work load at indexer output:

$$K_f = \frac{C_v \times 360 \times M}{\beta \times S}$$

A chart of K_i and K_f factors are listed on page A-19.

Motion Velocity Factor for Modified Sine Motion
(Moon Velocity Factor)

$$C_v = \frac{1.7596}{1 + (F \times 0.7596)} \quad \text{if } F = 0,\ C_v = 1.7596$$

Where F = % of constant velocity, e.g. F = 0.25 for 25% constant velocity, F = 0 for pure Modified Sine Motion (no constant velocity).

Motion Acceleration Factor
(Moon Acceleration Factor)

$$C_a = \frac{Cv \times \pi}{1 - F} \quad \text{if } F = 0,\ C_a = 5.5280$$

Constant Velocity Load Adjustment Factor

$$C = \frac{C_a}{5.5280} \quad \text{or } C = \frac{1}{1 - 0.24F - 0.76F^2}$$

Input Gear Ratio

$$G_i \equiv N_{motor} / N_{camshaft} = N_m/N_c$$

Output Gear Ratio

$$G_o \equiv D_{driver} / D_{driven} = D_r/D_n$$

Effective Radius of Gyration

$$k = \sqrt{\frac{\sum Wk^2}{\sum W}}$$

K is the theoretical radius at which all of the weight would be concentrated to produce an equivalent weight moment of inertia

Speed Correction Factor

$$F_s = \left(\frac{50}{N}\right)^{0.3}$$

Horsepower

$$Hp = \frac{T_c \times N_c}{63025 \times E}$$

Nomenclature

Terms used for Engineering Calculations

Symbol	Units	Description
β	deg.	Index Period
μ	–	Coefficient of Friction
B_{10}	in.-lbs.	Basic Dynamic Capacity of the Indexer at a Defined Index Rate
C	–	Constant Velocity Load Adjustment Factor
C_a	–	Motion Acceleration Factor
C_d	–	Factor for Calculating Output Torque
C_v	–	Motion Velocity Factor
D_d	in.	Dial Plate Diameter
D_n	in.	Diameter of Driven Pulley or Gear
D_r	in.	Diameter of Drive Pulley or Gear
D_s	in.	Pitch Diameter of Drive Sprocket(s)
D_t	in.	Pitch Diameter of Take-up Sprocket(s)
E	–	Reducer Efficiency
F	–	Percent of Constant Velocity
F_s	–	Index Rate Factor
G_i	–	Input Gear Ratio
G_o	–	Output Gear Ratio
k	in.	Radius of Gyration
K_f	–	Factor for Calculating Cam Shaft Torque Due to Friction and Work Load on Output
K_i	–	Factor for Calculating Cam Shaft Torque due to Inertia at Output
M	–	Type of Cam (Symbol) Integer Number 1, 2 or 3
N	ind./min.	Index Rate
n	–	Number of Teeth in Conveyor Drive Sprocket
N_c	RPM	Camshaft Rotation per Minute
N_m	RPM	Power Source Rotation per Minute (Motors, Line Shaft, etc.)
p	in.	Chain Pitch of Conveyor Sprocket
R_f	in.	Friction Force Radius
R_s	in.	Radius to Station Center
R_w	in.	Radius to Point of Work Load Application
S	–	Number of Stops or Stations Per One Revolution of the Output
SF	–	Service Factor 1.3
S_x	in.	Linear Index Distance
T_c	in.-lbs.	Camshaft Torque
T_f	in.-lbs.	Friction Torque at the Output
T_i	in.-lbs.	Inertia Torque at the Output
T_o	in.-lbs.	Total Output Torque
T_s	in.-lbs.	Static Torque
T_w	in.-lbs.	Work Torque at the Output
t	sec.	Total Cycle Time ($t_1 + t_2$)
t_1	sec.	Dwell Time
t_2	sec.	Index Time
W_c	lbs.	Weight of Chain and Fixtures
W_d	lbs.	Weight of Dial Plate
W_{ds}	lbs.	Weight of Drive Sprocket(s)
$Wk^2_{(ext.)}$	lbs.-in.^{2}	External Weight Moment of Inertia at Output
$Wk^2_{(int.)}$	lbs.-in.^{2}	Internal Weight Moment of Inertia at Output
$Wk^2_{(cl.)}$	lbs.-in.^{2}	Clutch Weight Moment of Inertia
W_n	lbs.	Weight of Driven Pulley or Gear
W_p	lbs.	Weight of Total Parts to be Indexed
W_r	lbs.	Weight of Drive Pulley or Gear
W_s	lbs.	Weight of Each Station (Fixture & Part)
W_t	lbs.	Weight of Take-up Sprocket(s)
W_w	lbs.	Work Load
Y	in.	Dial Plate Thickness

Inertia Tables

Multiply radius of gyration squared (k^2) by weight to get weight moment of inertia for torque demand calculation.

Radius of Gyration

Body With Central Axis of Rotation	k^2	Body with Offset Axis of Rotation	k^2
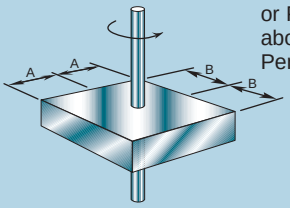 Rectangular Prism or Plate Rotating about its Central Perpendicular Axis	$\frac{A^2 + B^2}{3}$	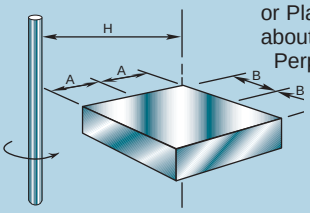 Rectangular Prism or Plate Rotating about a Perpendicular Offset Axis	$\frac{A^2 + B^2}{3} + H^2$
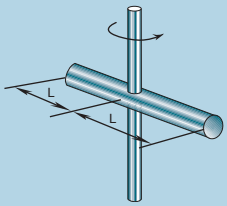 Long Thin Rod of any Cross Section Rotating about its Central Perpendicular Axis	$\frac{L^2}{3}$	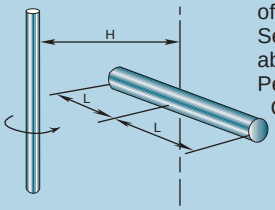 Long Thin Rod of any Cross Section Rotating about a Perpendicular Offset Axis	$\frac{L^2}{3} + H^2$
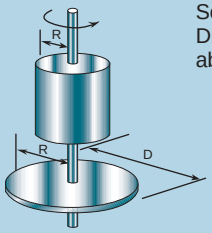 Solid Cylinder or Disc Rotating about its Own Axis	$\frac{R^2}{2}$ or $\frac{D^2}{8}$	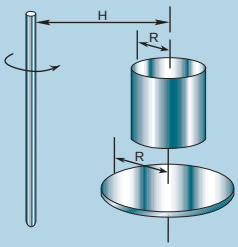 Solid Cylinder or Disc Rotating about an Offset Parallel Axis	$\frac{R^2}{2} + H^2$
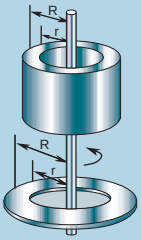 Hollow Cylinder or Flat Ring Rotating about its Own Axis	$\frac{R^2 + r^2}{2}$	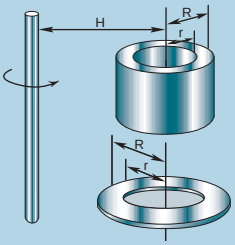 Hollow Cylinder or Flat Ring Rotating about an Offset Parallel Axis	$\frac{R^2 + r^2}{2} + H^2$
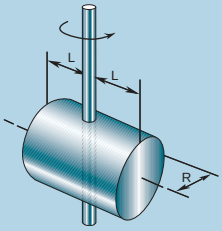 Solid Cylinder Rotating about its Diameter at Mid-Length	$\frac{L^2}{3} + \frac{R^2}{4}$	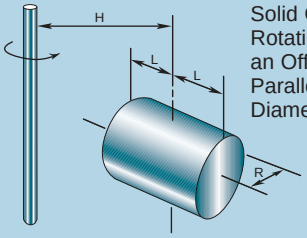 Solid Cylinder Rotating about an Offset Axis Parallel to its Diameter	$\frac{L^2}{3} + \frac{R^2}{4} + H^2$
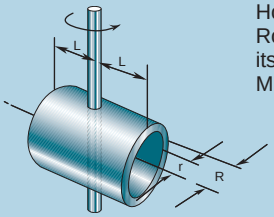 Hollow Cylinder Rotating about its Diameter at Mid-Length	$\frac{L^2}{3} + \frac{R^2 + r^2}{4}$	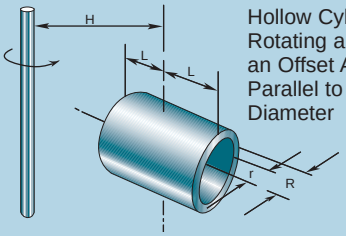 Hollow Cylinder Rotating about an Offset Axis Parallel to its Diameter	$\frac{L^2}{3} + \frac{R^2 + r^2}{4} + H^2$

Kinematic Calculations

In the "Cam Design Manual for Engineers, Designers, and Draftsmen," Clyde H. Moon developed factors for quickly calculating maximum velocity and maximum acceleration for an application. These are known as "Moon factors." For a Modified Sine Motion, the Moon factors are **C_v = 1.7596** and **C_a = 5.5280**. These factors are unitless and a chart of various Moon factors are listed on page A-19.

If we move an object 12 inches in 0.3 seconds using a Modified Sine Motion, the maximum velocity (at mid-point of index) is:

$$V_{max} = \frac{C_v \times \text{Displacement}}{t_2}$$

$$= \frac{1.7596 \times 12}{0.3} = 70.4 \text{ inches/second}$$

The maximum acceleration is:

$$A_{max} = \frac{C_a \times \text{Displacement}}{t_2^2}$$

$$= \frac{5.528 \times 12}{0.3^2} = 737 \text{ inches/sec}^2$$

$$= 1.9 \text{ g's}$$

It can also be used for calculating rotational g force (also known as centrifugal force):

Index a 15-lb. object at a 40 inch radius 90 degrees in 0.5 seconds:

$$\text{Force}_{centrifugal} = \text{Mass} \times a_{radialmax}$$

$$= \text{Mass} \times \omega_{max}^2 \times R$$

$$= \frac{15}{386.4} \times \left(\frac{1.7596 \times 90° \times \pi}{180° \times 0.5}\right)^2 \times 40$$

$$= 47.4 \text{ lbs.} = \frac{47.4}{15} \text{ g's} = 3.2 \text{ g's}$$

The tangential force component is:

$$\text{Force}_{Tangential} = \text{Mass} \times a_{tmax}$$

$$= \frac{15}{386.4} \times \frac{5.528 \times 40 \times 90° \times \pi}{180° \times 0.5^2}$$

$$= 53.9 \text{ lbs.} = \frac{53.9}{15} \text{ g's} = 3.6 \text{ g's}$$

K_i K_f Tables & Moon Factor Tables (C_v and C_a)

Values listed are for type 1 units, multiply values by 2 for type 2 units. For motions with constant velocity, multiply K factor by the adjustment factor listed below.

Number of Stops	Index Period (Modified-Sine Motion)													
	90°		120°		150°		180°		210°		270°		330°	
	K_i	K_f	K_i	K_f	K_i	K_f	K_i	K_f	K_i	K_f	K_i	K_f	K_i	K_f
1	3.94	7.04	2.96	5.28	2.36	4.22	1.97	3.52	1.69	3.02	1.31	2.35	1.07	1.92
2	1.97	3.52	1.48	2.64	1.18	2.11	0.99	1.76	0.84	1.51	0.66	1.17	0.54	0.96
3	1.31	2.35	0.99	1.76	0.79	1.41	0.66	1.17	0.56	1.01	0.44	0.78	0.36	0.64
4	0.99	1.76	0.74	1.32	0.59	1.06	0.49	0.88	0.42	0.75	0.33	0.59	0.27	0.48
6	0.66	1.17	0.49	0.88	0.39	0.70	0.33	0.59	0.28	0.50	0.22	0.39	0.18	0.32
8	0.49	0.88	0.37	0.66	0.30	0.53	0.25	0.44	0.21	0.38	0.16	0.29	0.13	0.24
10	0.39	0.70	0.30	0.53	0.24	0.42	0.20	0.35	0.17	0.30	0.13	0.23	0.11	0.19
12	0.33	0.59	0.25	0.44	0.20	0.35	0.16	0.29	0.14	0.25	0.11	0.20	0.09	0.16
16	0.25	0.44	0.18	0.33	0.15	0.26	0.12	0.22	0.11	0.19	0.08	0.15	0.07	0.12
24	0.16	0.29	0.12	0.22	0.10	0.18	0.08	0.15	0.07	0.13	0.05	0.10	0.04	0.08
36	0.11	0.20	0.08	0.15	0.07	0.12	0.05	0.10	0.05	0.08	0.04	0.07	0.03	0.05

K_i and K_f Adjustment Factors

For % Constant Velocity	Multiply K factor by
0%	1.00
20%	0.87
25%	0.84
33%	0.80
50%	0.72
66%	0.67
75%	0.64

Constant Velocity Adjustment Factor "C", Velocity and Acceleration Factors

	% Constant Velocity								
	0%	5%	10%	20%	25%	33%	50%	66%	75%
C	1.000	1.014	1.033	1.085	1.120	1.193	1.449	1.959	2.548
C_v	1.7596	1.6952	1.6354	1.5275	1.4788	1.4069	1.2753	1.1720	1.1210
C_a	5.5280	5.6060	5.7085	5.9986	6.1943	6.5970	8.0127	10.8295	14.0866

Accuracy

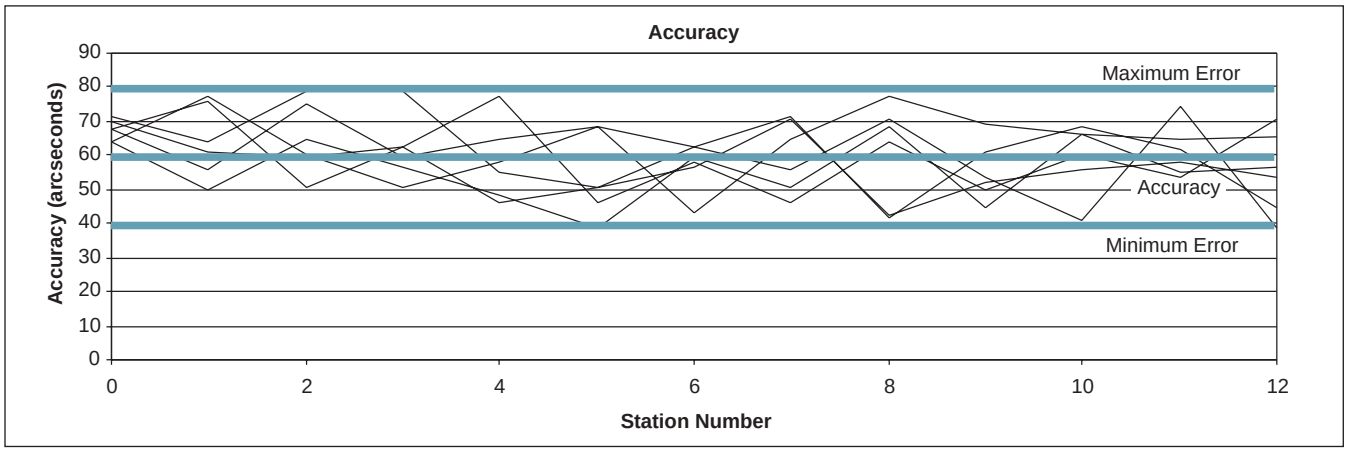

IMC intentionally chooses to state the Maximum Error as the indexer's worst possible accuracy. While some index drive manufacturers use the average as their stated accuracy and decline to state the repeatability, IMC takes a more conservative approach.

Measurement Method

The output angular error of an index drive is measured using a laser collimator mounted to a precision rotary table. The laser collimator is accurate to 2 arc seconds and repeatable to 1 arc second. The indexer will make 3 to 6 complete turns of its output and accuracy measurements are recorded. The accuracy is the mean between the maximum and minimum error. The repeatability is one-half the difference between the maximum and minimum error.

Upon request, IMC can provide special accuracy reports for a particular indexer.

Vibration

Cam-actuated index drives are frequently chosen because of their stability in dwell, especially when operating at high speeds. It is important to ascertain that the entire system is well designed to prevent any unwanted vibrations. Vibration is a function of the index time, index rate, friction (dampens the system), input and output connections, torsional spring rate and the natural frequency of the indexer and driven members.

One simple method to avoid problems is to calculate the ratio of the effective radius of gyration (k) to the cam follower pitch radius. This method does not always produce consistent results. For example, a system with a large effective radius of gyration can be run at slow speed and there are no observable vibrations in dwell. Friction also helps prevent vibration, as in the case of precision link conveyor systems.

(continued)

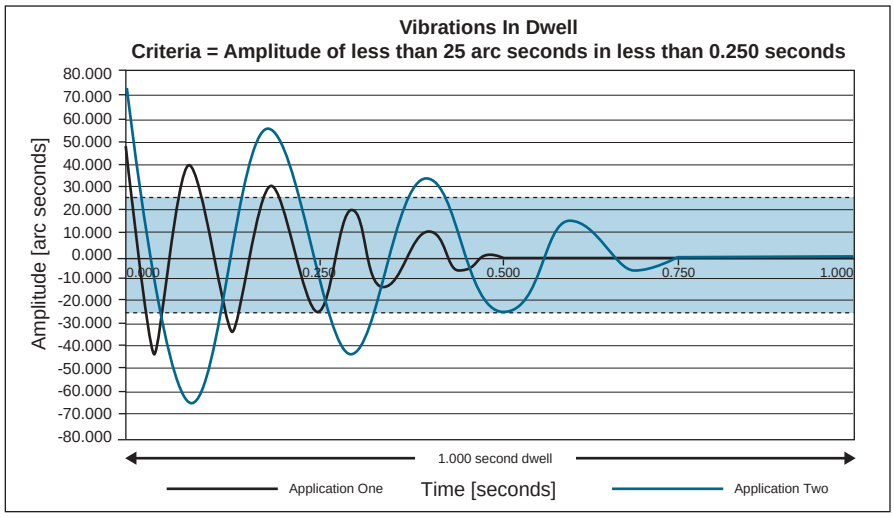

Vibration

(continued)

IMC has developed stability criteria that effectively predict vibration effects. The criteria require that the amplitude of the vibration must be less than 25 arc seconds in 25% of the dwell time. IMC's loading programs automatically check for this prerequisite.

Vibration can be avoided by following the recommended input and output connection methods and confirming the vibration effect of the specific application using IMC's loading software program.

Emergency Stop

Emergency stops can occur during any part of the index motion. OSHA and other regulatory agencies would like this stop to occur instantaneously. The laws of physics require that the stop occurs within a finite time – and this time cannot be too extended (for it would defeat the purpose of an emergency stop).

Intuition suggests that the worst possible time for an emergency stop is at mid-motion of the index, at peak output velocity. At that moment we have the greatest amount of kinetic energy. The mathematics of motion curves prove otherwise. For a particular type of motion, computer software analysis is the best method for determining the worst case scenario. Upon request, IMC engineering staff can evaluate and calculate the maximum expected stop times for specific applications and also evaluate the resulting stresses on the cam, cam followers, follower wheel and input components (reducer, motor, clutch and brake). Normal forces on the cam follower must not exceed the vendor's recommended maximum and the cam and camshaft stress must not exceed the ultimate yield stress of the material (the cam and camshaft are normally designed for fatigue and not strength).

For an application with an Emergency stop requirement, IMC recommends that the drive package for an indexer should be a low ratio worm gear drive (10:1 or 15:1) along with a helical primary (5:1 or 5:1). This should be coupled to an air or hydraulic clutch-brake. Wet type or Hydro-viscous type clutch-brakes are recommended due to their low inertia of the cyclic parts and high heat dissipation capability. In contrast, dry type clutch-brakes wear quickly. In an Emergency stop mode, the clutch-brake disengages the motor since the low-ratio gear combination (low ratio worm and helical primary combination) will be intentionally back driven. The brake then dissipates the kinetic energy of the Emergency stop. For further details, please contact your IMC sales representative or IMC application engineer.

Overload Protection

IMC offers a wide variety of output overload clutches and input overload clutches designed to protect the indexer drive. Overload clutches are recommended due to the nature of indexing. At the very beginning of an index, the input displacement is large while the output displacement is miniscule. At that precise moment, the instantaneous gear ratio of the drive is extremely high – almost infinite. Small amounts of input torque produce tremendous output torque. If there are any machine components or product parts jamming the mechanism (dial, conveyor belt or other linkage), the tooling or the index drive itself could be damaged. IMC clutches are offered in a wide assortment of geometries to accommodate shaft-to-shaft, flange-to-shaft and dial applications. IMC also offers internal overload clutches on certain models to protect the clutch from foreign contamination. IMC overload clutches for indexing applications have a single position reset point ot ensure accuracy and repeatablility.

Typically, proximity switches are mounted adjacent to the clutch to sense an overload condition (sense the detector plate movement) and shut down the machinery.

Lubrication

Indexers

IMC Index drives are normally shipped without oil to avoid possible leakage during transit. Each particular index drive mounting position requires a different oil level. A “bulls eye” type oil level sight gauge is supplied with each index drive. The unit should be filled with oil until the level reaches the middle of this sight gauge.

Lubricating oils for use in an index drive should be high quality, well-refined petroleum oils or synthetic lubricants with extreme pressure additives. They may be subject to high operating temperatures, so they must have good resistance to oxidation. The lubricant must meet these specifications: MIL-PRE-2105E or SAE 80W-140, ISO 220 or AGMA 5 with EP (extreme pressure) additives.

Some units use grease rather than oil. In this case, the unit will be shipped with the grease. Generally, IMC uses a lithium grease such as Mobilith AW-2.

Gear Reducers

Lubricating oils for gear reducers should also be of high quality, well-refined petroleum oils. These oils should meet AGMA 8 or 8A specifications or ISO 680 or 1000 specifications. Oils with EP additives should not be used if the reducer contains bronze parts.

If you have any questions regarding lubricants, please contact IMC’s engineering department.

Axial, Radial & Moment Capacity

In addition to the B_{10} capacity, which is based on the cam follower capacity, an index drive also has a load capacity based on the bearings supporting the output. Several load conditions can be present in an application:

- **Axial or Thrust Capacity** is the maximum balanced load the indexer's output bearing can support. Due to the use of large bearings, this load capacity generally does not need to be addressed in normal applications.
- **Radial Capacity** is the maximum side load of the output bearing, applied through and perpendicular to the axis of rotation.
- **Moment Capacity** is the maximum overturning or unbalanced load capacity of the output bearing.

The Axial, Radial and Moment capacities for most indexers are listed in the appropriate product section.

Exceeding the capacity of the output bearing with any of these types of forces can cause permanent deformation of the cam, fractured cam followers, or output bearing failure. Contact IMC engineering for analysis of application with special requirements regarding any of these conditions.

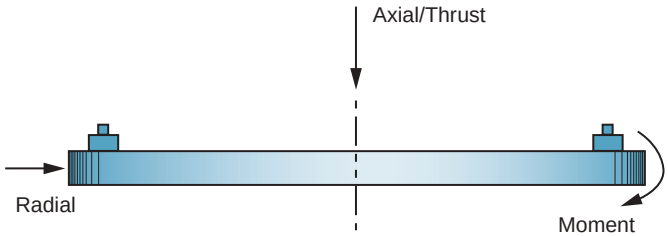

Input Considerations

All load calculations are based on a constant velocity input (camshaft speed) during the index. If there are any speed variations on the input shaft, these variations are amplified on the output shaft (velocities are accelerated and accelerations become jerk). It is very important to have a controlled motor speed and a reducer ratio sufficient to dampen any input speed variations. If input belts are used, they must be tightened to prevent any slip or belt jumping when positive torque changes to negative torque (input shafts typically see both positive and negative torque in an indexing application). Pulleys should be maximized to the largest diameter that can fit on the camshaft. Adjustable tensioning idler pulleys are highly recommended. If you have any questions regarding input speed control, please contact your local IMC sales representative or IMC application engineer.

Output Considerations

Indexing always imparts positive and negative torques on the driven members. All connections should be tight and doweled whenever possible. Shaft coupling connections should have an interference fit and not depend on the keyway for tightness, as any clearance in the key stock or keyways will eventually cause the connection to loosen.

IMC Online

The IMC website, **www.camcoindex.com**, features useful tools for those responsible for specifying, applying and servicing Camco and Ferguson products. These include:

- 2-D and 3-D CAD drawings in a variety of formats
- General and Product-specific Service Manuals
- Product Catalogs
- Contact information for local sales representatives

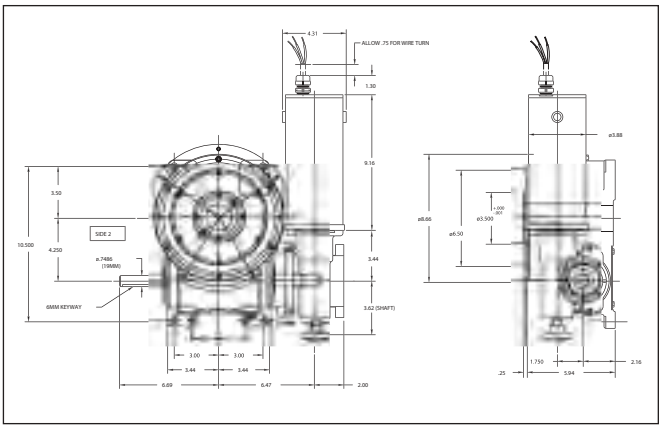

Weights & Oil Content

Right Angle				
Model	Weight (lbs)	Weight (Kg)	Oil Capacity (quarts)	Oil Capacity (Liters)
301RA	15	7	C/F	C/F
400RA	33	15	1	1.0
401RA	55	25	1	1.0
512RA	80	36	2	2.0
662RA	160	73	6	6.0
663RA	130	59	4	4.0
900RA	220	100	6	6.0
1200RA	850	386	C/F	C/F

Parallel				
Model	Weight (lbs)	Weight (Kg)	Oil Capacity (quarts)	Oil Capacity (Liters)
250P	18	8	1	1
387P	55	25	2	2
512P	135	61	5	5
662P	430	195	10	10
900P	750	340	20	19
1200P	1,100	499	48	45
1800P	3,000	1,361	95	90
P200	20	9	C/F	C/F
P325	60	27	2	2
P400	85	39	4	4
P500	110	50	4	4
P600	160	73	6	6
P750	500	227	14	13
P1050	750	340	24	23
P1400	1,100	499	52	49
P1700	3,000	1,361	76	72

Roller Gear				
Model	Weight (lbs)	Weight (Kg)	Oil Capacity (quarts)	Oil Capacity (Liters)
350RG	35	16	2	1
500RG	350	159	5	5
600RG	390	177	7	7
700RG	400	181	10	9
FD-100	10	5	7 oz	0.2
FD-162	50	23	2	2
FD-200	115	52	4	4
FD-250	125	57	7	7
FD-300	300	136	10	9
FD-451	560	254	12	11
FD-501	900	408	22	21

Overload Clutches		
Model	Weight (lbs)	Weight (Kg)
0.39	5	2
2.3	10	5
4	17	8
6	25	11
7.8	20	9
11	40	18
18	75	34
35	57	26
31	123	56

Torq Gard Clutches		
Model	Weight (lbs)	Weight (Kg)
TG3	2	1
TG6	2	1
TG20	3	1
TG60	6	3
TG200	12	5
TG400	43	20
TG800	43	20

Cambots				
Model	Weight (lbs)	Weight (Kg)	Oil Capacity (quarts)	Oil Capacity (Liters)
150RPP	45	20	2.5	2
300RPP	110	50	4	4
500RPP	300	136	10	9
900RPP	575	261	48	45
WBD-101	C/F	C/F	These units are grease-filled. Consult the model-specific service manual for lubrication information.	
WBD-201	C/F	C/F		
WBD-301	C/F	C/F		
WBD-401	C/F	C/F		
140LPP	55	25		
240LPP	80	36		
380LPP	200	91		
4120LPP	340	154		
LPP-101	C/F	C/F		
LPP-201	C/F	C/F		
LPP-301	C/F	C/F		
LPP-401	C/F	C/F		

Weights & Oil Content

(continued)

Roller Dial				
Model	Weight (lbs)	Weight (Kg)	Oil Capacity (quarts)	Oil Capacity (Liters)
601RDM	70	32	2	2
902RDM	130	59	3	3
1100RDM	C/F	C/F	8	8
1305RDM	305	138	9	9
1800RDM	1,400	635	36	34
PN300	50	23	4	4
PN400	C/F	C/F	8	8
PN500	C/F	C/F	12	11
ED200	300	136	6	6
ED420	750	340	20	19
ED810	1,200	544	20 gal	76
ED1440	3,000	1,361	30 gal	114
ED3240	9,500	4,309	35 gal	132
425RD	110	50	2	2
800RD	450	204	5	5
1301RD	1,000	454	14	13
1801RD	2,400	1,089	9 gal	34
122	200	91	16	15
242	800	363	32	30
362	1,500	680	56	53
482	6,000	2,722	33 gal	125
722	8,750	3,969	42 gal	159

Gear Reducers				
Model	Weight (lbs)	Weight (Kg)	Oil Capacity (quarts)	Oil Capacity (Liters)
180SM	10	5	1	1
R225	25	11	1	1
R260	25	11	1	1
7300C	89	40	1.5	1.4
7350C	123	56	3.5	3.3
7400C	180	82	4	3.8
7500C	307	139	7	6.6
7600C	433	196	11	10
7700C	625	283	20	19
7800C	755	342	26	25
71000C	1,625	737	56	53
20CDSF	35	16	13 oz	0.4
26CDSF	55	25	2	1.9
6SF	85	39	2	1.9

Miniature Roller Gear				
Model	Weight (lbs)	Weight (Kg)	Oil Capacity (quarts)	Oil Capacity (Liters)
32RG	3	1	C/F	C/F
40RG	6	3	6 oz	0.2
50RG	18	8	1	0.5
70RG	25	11	1.25 - 1.5	1.2 - 1.4
80RG	65	29	30 - 38 oz	1.8 - 2.25

E Series				
Model	Weight (lbs)	Weight (Kg)	Oil Capacity (gallons)	Oil Capacity (Liters)
950E	5,000	2,268	10 gal	38
1150E	5,500	2,495	25 gal	95
1550E	6,000	2,722	40 gal	152
2050E	18,000	8,165	45 gal	170
2750E	54,000	24,494	75 gal	284

RDM Index Drives

IMC
INDUSTRIAL MOTION CONTROL, LLC.
CAMCO FERGUSON

Features

The RDM Series Index Drive is ideal for rotary dial applications with features including:

- Large Output Mounting Surface supported by 4-point contact bearing offering superior thrust and moment capacity
- Large Center Thru Hole
- Low Profile
- Complete, Motorized Drive Packages
- Optional Output Overload Clutch

80RDM

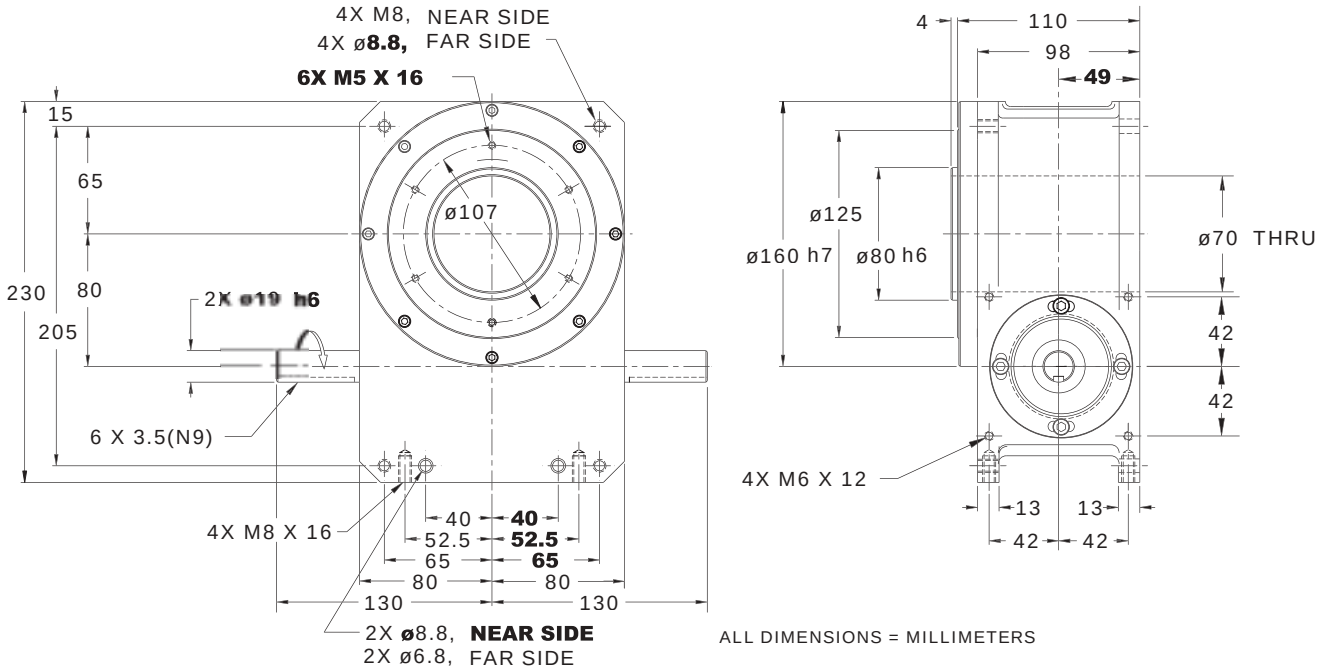

All dimensions are subject to change. For actual dimensions, please request the current drawing from IMC.

80RDM Indexer Capacities

Stops (S)	Index Period (β)	Motion	B_{10} Capacity at 50 RPM (in-lb)	Internal Inertia (lb-in^2)	Model
2	330	msc.50	716	28	80RDM2H16-330
3	330	msc.25	798	28	80RDM3H16-330
4	330	msc.33	1455	28	80RDM4H20-330
6	270	ms	1540	30	80RDM6H20-270
8	270	ms	1197	29	80RDM8H16-270
12	270	ms	1661	30	80RDM12H20-270
	180	ms	1817	30	80RDM12H20-180
	120	msc.33	2222	30	80RDM12H20-120
16	270	ms	1260	29	80RDM16H16-270
	180	ms	1392	29	80RDM16H16-180
	120	ms	1473	29	80RDM16H16-120
	90	msc.33	1724	29	80RDM16H16-90
24	270	ms	2012	30	80RDM24H20-270 II
	180	ms	2233	30	80RDM24H20-180 II
32	270	ms	1523	29	80RDM32H16-270 II
	180	ms	1681	29	80RDM32H16-180 II
4	360	c.v.	482	30	80RDM0H20-360 4:1
8	360	c.v.	370	29	80RDM0H16-360 8:1
12	360	c.v.	547	30	80RDM0H20-360 12:1
16	360	c.v.	384	29	80RDM0H16-360 16:1

Other Motions (stops and index periods) available. Contact your IMC sales representative for more information.

Technical Specifications

Output Load Capacity – loads carried during index

Radial	730 lbs
Thrust/Axial	1,810 lbs
Moment	1,810 in.-lbs

Typical Application Dial Diameter: 8 in. to 28 in.

Accuracy	±44 arcsec / ±.003" at 14" Radius
Repeatability	±22 arcsec / ±.0014" at 14" Radius

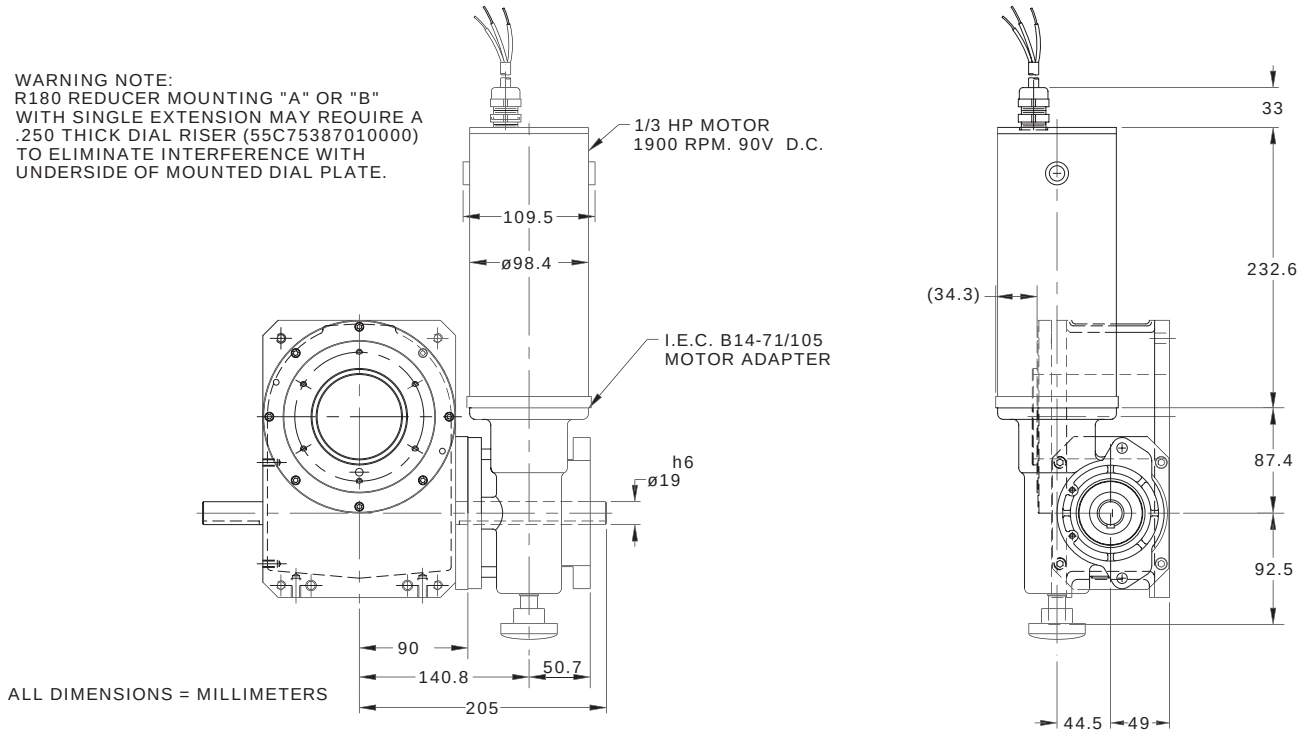

All dimensions are subject to change. For actual dimensions, please request the current drawing from IMC.

Standard Package

80RDM Indexer with

- R180 Reducer (Ratios from 5:1 to 60:1)
  - Double Extended Worm Shaft (Input)
  - Worm Shaft Handwheel
- Double Extended Camshaft (Input Shaft)
- Center Thru Hole (70 mm / 2.76 in. Diameter)
- 1/3 hp DC Motor
- Varipak DC Motor Control (up to 30 cpm)
- Cycle Cam and Limit Switch Mounted to Camshaft
- Right Hand Cam
- Universal Mounting Capability

Optional Accessories

- 1/3 hp AC Drive Package with Inverter Duty Motor and Inverter Drive (up to 60 cpm)
- SW-030 or SW-040 reducer with Option Internal OLC
- Stationary Center Post
- Dual Cam and Limit Switch
- Base Riser Blocks
- Electric Clutch-Brake
- Air Motor Drive Package
- 180IOC Input Overload Clutch
- Left Hand Cam
- Relief in Dwell for shot-pin applications
- Custom Dial Plate

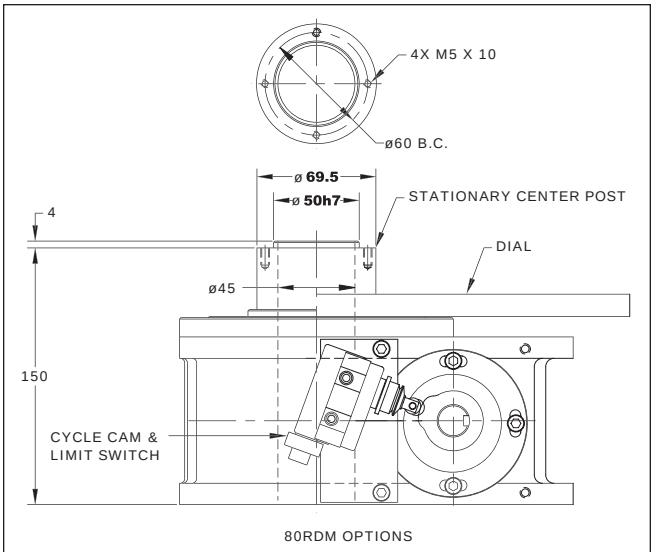

80RDM OPTIONS

All dimensions are subject to change. For actual dimensions, please request the current drawing from IMC.

B

601RDM

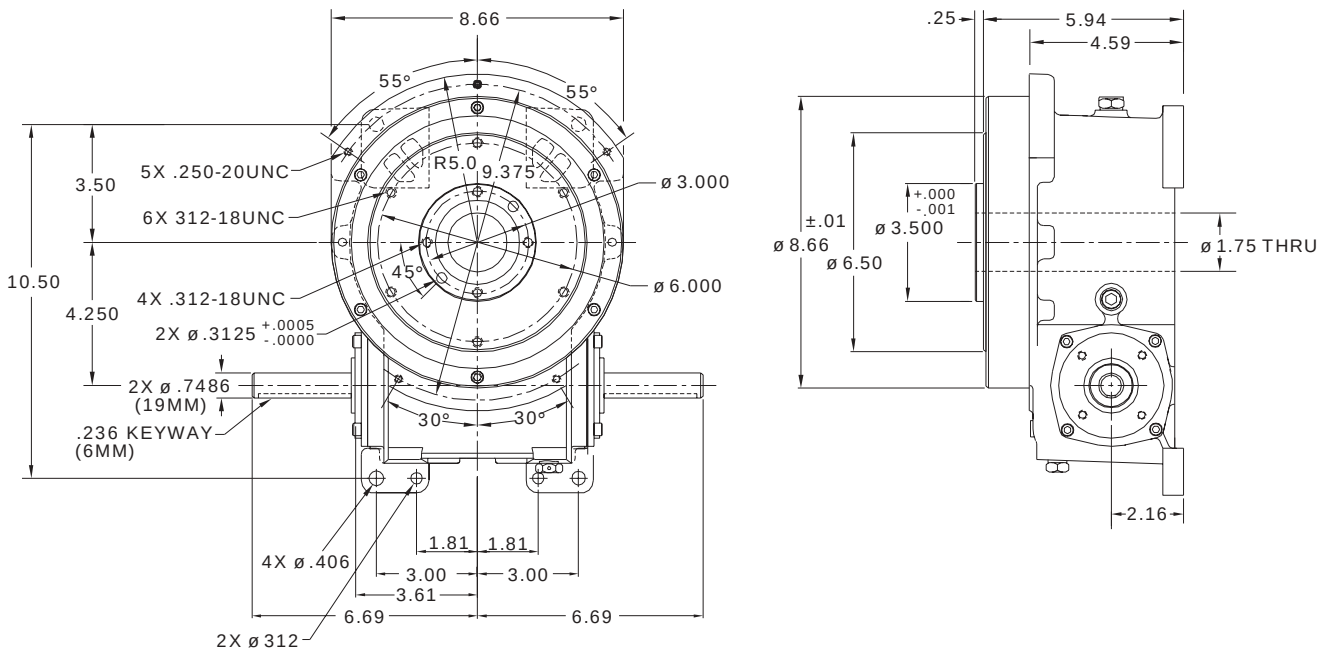

All dimensions are subject to change. For actual dimensions, please request the current drawing from IMC.

601RDM Indexer Capacities

Stops (S)	Index Period (β)	Motion	B_{10} Capacity at 50 RPM (in-lb)	Internal Inertia (lb-in^2)	Model
2	330	msc.67	1555	112	601RDM2H20-330
3	330	msc.33	2950	112	601RDM3H24-330
4	330	msc.33	3683	112	601RDM4H24-330
6	270	ms	4025	112	601RDM6H24-270
8	270	msc.33	5035	112	601RDM8H24-270
	180	msc.67	6758	112	601RDM8H24-180
12	270	ms	4452	112	601RDM12H24-270
	180	ms	4985	112	601RDM12H24-180
	120	msc.33	6225	112	601RDM12H24-120
16	270	ms	4511	112	601RDM16H24-270
	180	ms	5061	112	601RDM16H24-180
	120	msc.50	6780	112	601RDM16H24-120
24	270	ms	5879	112	601RDM24H24-270 II
	180	ms	6479	112	601RDM24H24-180 II
32	270	ms	5937	112	601RDM32H24-270 II
	180	ms	6651	112	601RDM32H24-180 II
4	360	c.v.	1110	110	601RDM0H24-360 4:1
6	360	c.v.	1212	110	601RDM0H24-360 6:1
8	360	c.v.	1274	112	601RDM0H24-360 8:1
12	360	c.v.	1286	110	601RDM0H24-360 12:1

Other Motions (stops and index periods) available. Contact your IMC sales representative for more information.

Technical Specifications

Output Load Capacity – loads carried during index

Radial	910 lbs
Thrust/Axial	2,270 lbs
Moment	3,180 in.-lbs

Typical Application Dial Diameter: 12 in. to 36 in.

Accuracy	±39 arcsec / ±.003" at 18" Radius
Repeatability	±22 arcsec / ±.002" at 18" Radius

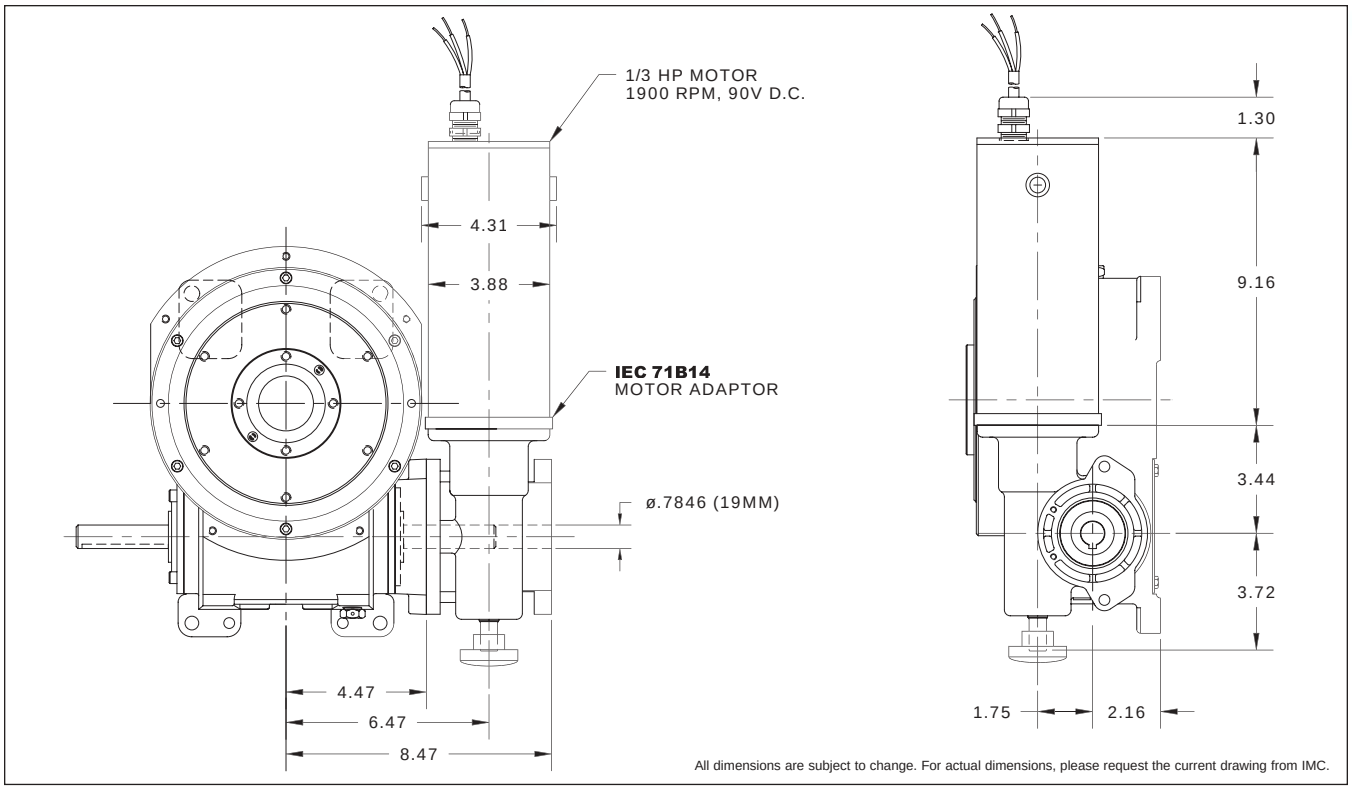

All dimensions are subject to change. For actual dimensions, please request the current drawing from IMC.

Standard Package

601RDM Indexer with

- R180 Reducer (Ratios from 5:1 to 60:1)
  - Double Extended Worm Shaft (Input)
  - Worm Shaft Handwheel
- Double Extended Camshaft (Input Shaft)
- Center Thru Hole (1.75 in. Diameter)
- 1/3 hp DC Motor
- Varipak DC Motor Control (up to 30 cpm)
- Cycle Cam and Limit Switch Mounted to Camshaft
- Right Hand Cam

Optional Accessories

- 1/3 hp AC Drive Package with Inverter Duty Motor and Inverter Drive (up to 60 cpm)
- R225 Heavy Duty Reducer (ratios from 5:1 to 60:1) with 1 hp DC Motor
- Output Overload Clutch model 4.0D
  - Available Settings (in-lbs): 420, 620, 750, 1150, 1750, 2940, 4000
- Stationary Center Post
- Dual Cam and Limit Switch
- Base Riser Blocks
- Electric Clutch-Brake
- Air Clutch-Brake (requires R225 Reducer)
- Air Motor Drive Package
- 180IOC or 225IOC Input OLC
- Left Hand Cam
- Relief in Dwell for shot-pin applications
- Custom Dial Plate

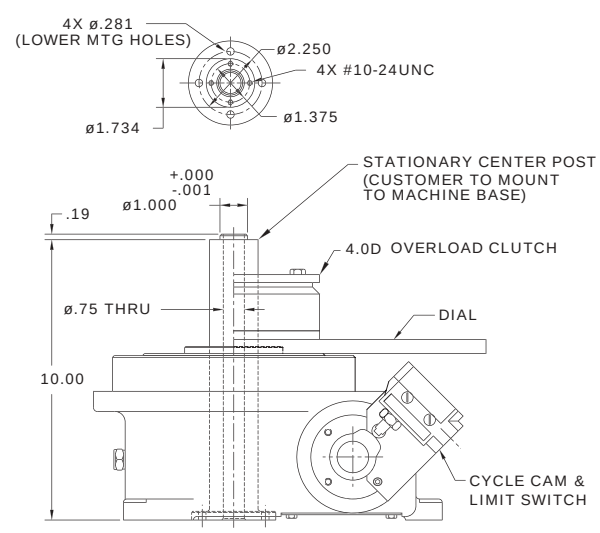

601RDM OPTIONS

All dimensions are subject to change. For actual dimensions, please request the current drawing from IMC.

B

902RDM

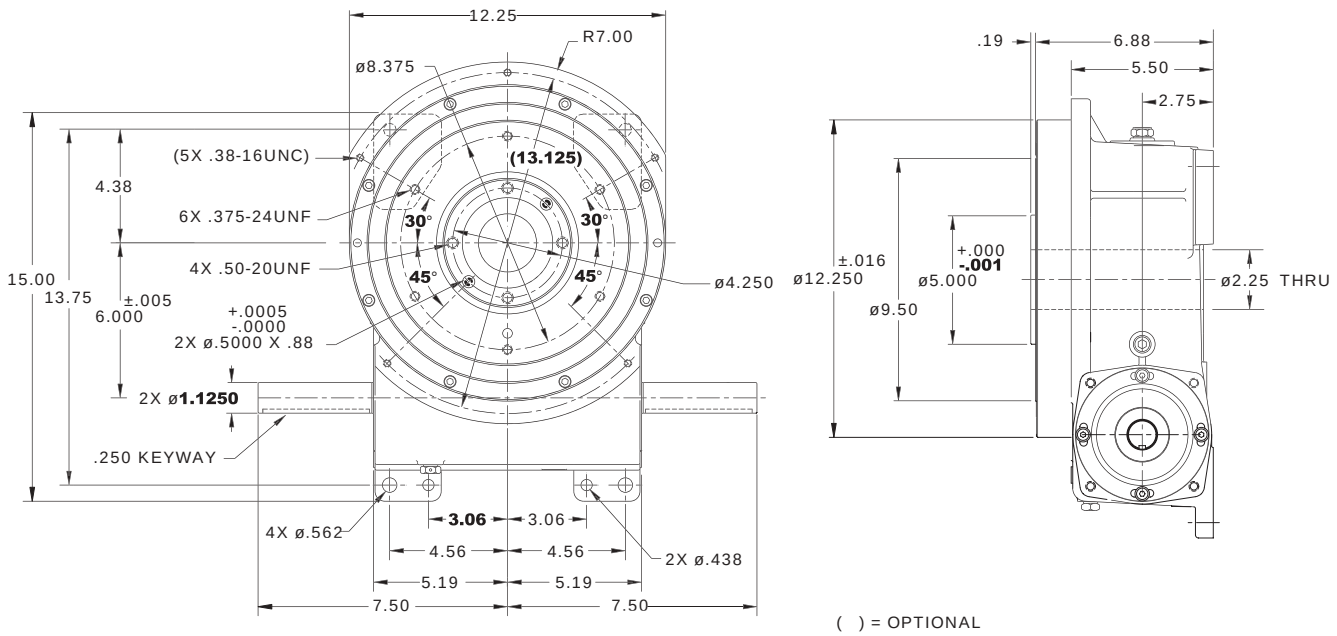

All dimensions are subject to change. For actual dimensions, please request the current drawing from IMC.

902RDM Indexer Capacities

Stops (S)	Index Period (β)	Motion	B_{10} Capacity at 50 RPM (in-lb)	Internal Inertia (lb-in^2)	Model
2	330	msc.67	5361	595	902RDM2H32-330
3	330	msc.33	5461	595	902RDM3H32-330
4	330	msc.33	6524	595	902RDM4H32-330
6	270	ms	6913	595	902RDM6H32-270
8	270	ms	8833	612	902RDM8H32-270
	180	msc.33	8023	612	902RDM8H24-180
12	270	ms	7726	595	902RDM12H32-270
	180	ms	8751	595	902RDM12H32-180
	120	ms	9276	595	902RDM12H32-120
16	270	ms	8711	612	902RDM16H32-270
	180	ms	9599	612	902RDM16H32-180
	120	ms	10202	612	902RDM16H32-120
24	270	ms	10877	595	902RDM24H32-270 II
	180	ms	11494	595	902RDM24H32-180 II
32	270	ms	11877	612	902RDM32H32-270 II
	180	ms	13108	612	902RDM32H32-180 II
4	360	c.v.	2092	612	902RDM0H32-360 4:1
6	360	c.v.	2359	595	902RDM0H32-360 6:1
8	360	c.v.	2498	612	902RDM0H32-360 8:1
12	360	c.v.	2539	595	902RDM0H32-360 12:1

Other Motions (stops and index periods) available. Contact your IMC sales representative for more information.

Technical Specifications

Output Load Capacity – loads carried during index

Radial	3,540 lbs
Thrust/Axial	8,850 lbs
Moment	17,700 in.-lbs

Typical Application Dial Diameter: 20 in. to 48 in.

Accuracy	±27 arcsec / ±.003" at 24" Radius
Repeatability	±13 arcsec / ±.0015" at 24" Radius

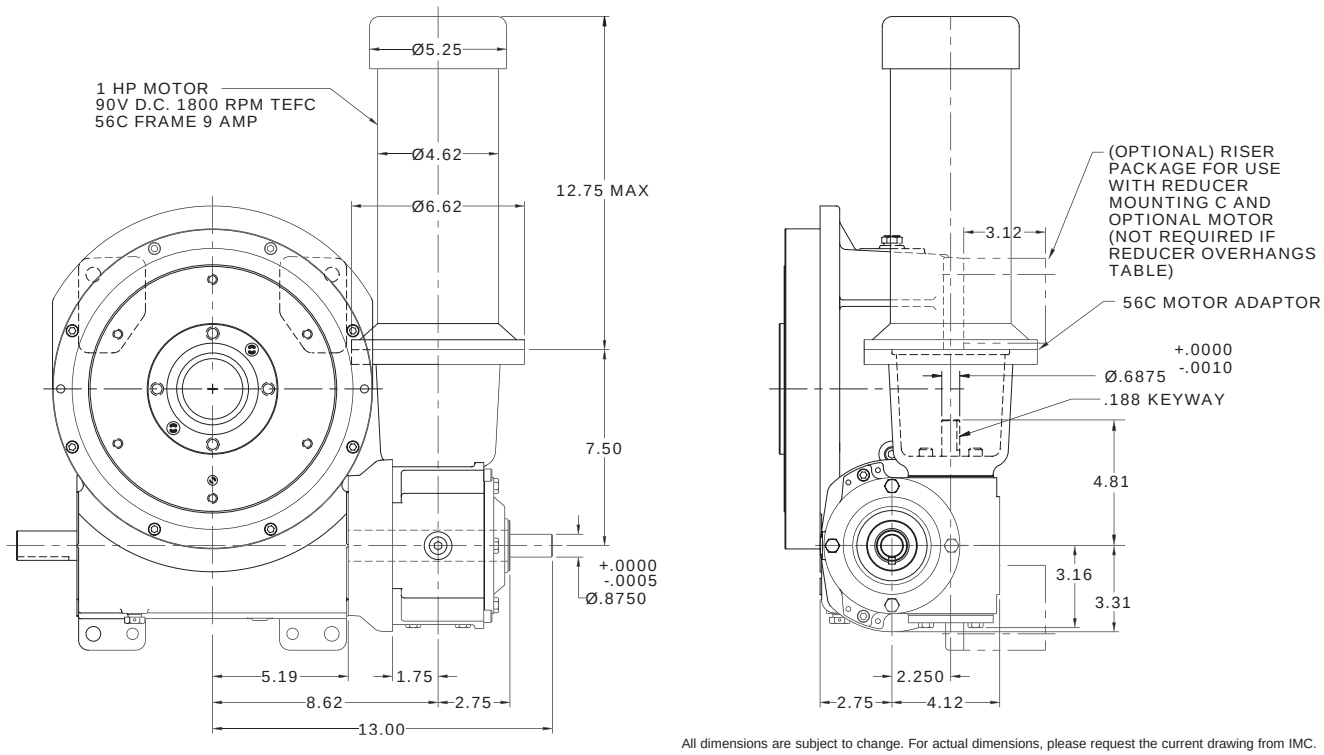

All dimensions are subject to change. For actual dimensions, please request the current drawing from IMC.

Standard Package

902RDM Indexer with

- R225 Reducer (Ratios from 5:1 to 60:1)
- Double Extended Camshaft (Input Shaft)
- Center Thru Hole (2.25 in. Diameter)
- 1 hp DC Motor
- Varipak DC Motor Control (up to 30 cpm)
- Cycle Cam and Limit Switch Mounted to Camshaft
- Right Hand Cam

Optional Accessories

- 1 hp AC Drive Package with Inverter Duty Motor and Inverter Drive (up to 60 cpm)
- R260 Reducer (Ratios from 5:1 to 60:1)
- Output Overload Clutch model 7.8D
  - Available Settings (in-lbs): 1400, 1700, 2600, 3200, 4200, 5000, 7200, 10000
- Stationary Center Post
- Dual Cam and Limit Switch
- Base Riser Blocks
- Electric Clutch-Brake
- Air Clutch-Brake
- Air Motor Drive Package
- 225IOC or 260IOC Input OLC
- Left Hand Cam
- Relief in Dwell for shot-pin applications
- Custom Dial Plate

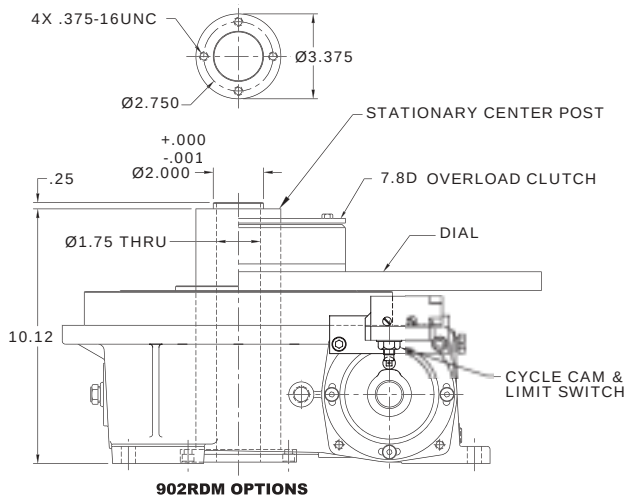

902RDM OPTIONS

All dimensions are subject to change. For actual dimensions, please request the current drawing from IMC.

B

1100RDM

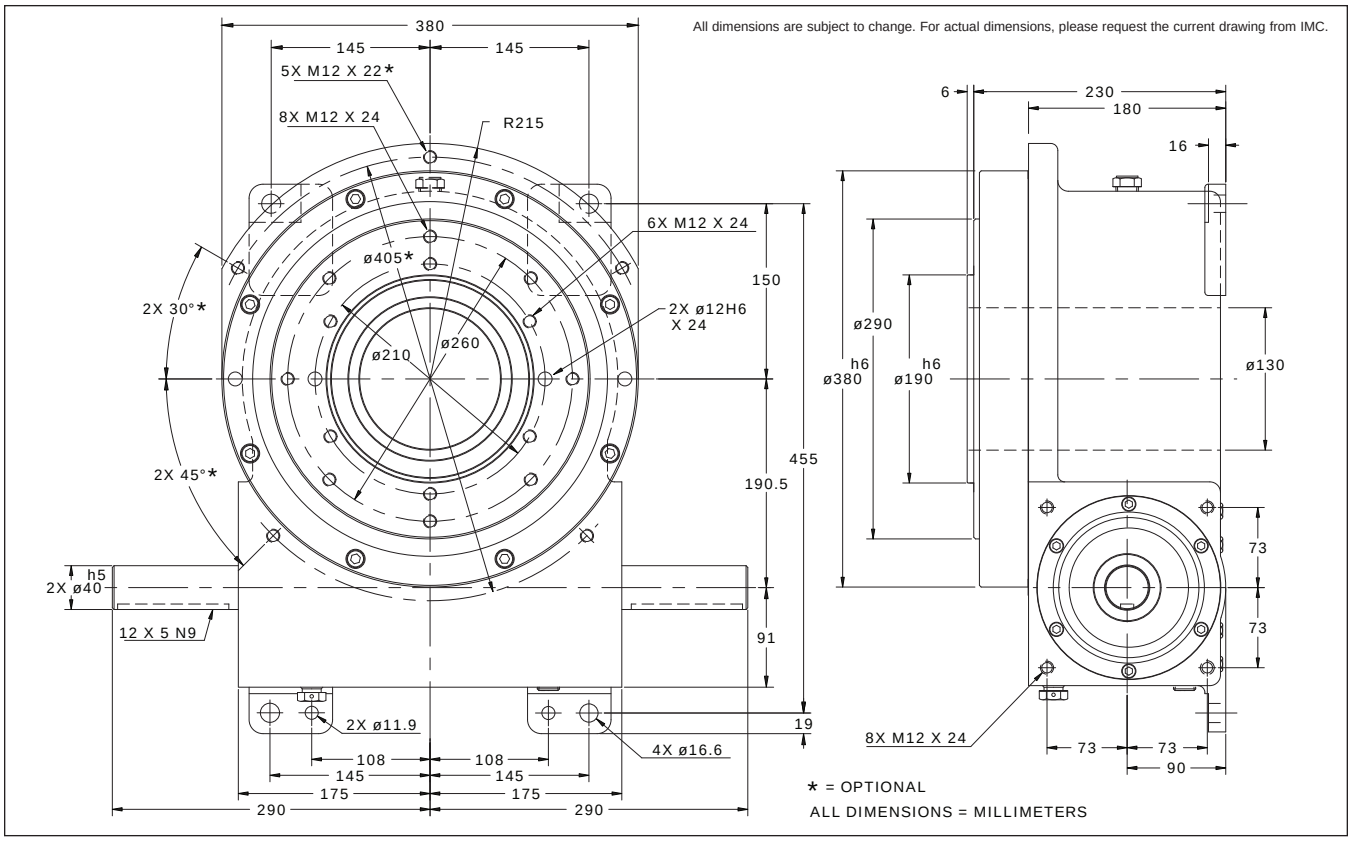

1100RDM Indexer Capacities

Stops (S)	Index Period (β)	Motion	B_{10} Capacity at 50 RPM (in-lb)	Internal Inertia (lb-in²)	Model
2	330	msc.50	12937	1978	1100RDM2H48-330
3	330	msc.50	15169	1907	1100RDM3H40-330
4	330	msc.33	21780	2019	1100RDM4H48-330
6	270	msc.25	25957	2019	1100RDM6H48-270
8	270	ms	18443	1955	1100RDM8H40-270
	180	msc.50	24196	1955	1100RDM8H40-180
12	270	ms	23992	2019	1100RDM12H48-270
	180	ms	27161	2019	1100RDM12H48-180
	120	ms	21709	1907	1100RDM12H40-120
16	270	ms	18824	1955	1100RDM16H40-270
	180	ms	20824	1907	1100RDM16H40-180
	120	msc.25	24373	1955	1100RDM16H40-120
24	270	ms	31373	2019	1100RDM24H48-270 II
	180	ms	35117	2019	1100RDM24H48-180 II
32	270	ms	25453	1955	1100RDM32H40-270 II
	180	ms	28258	1907	1100RDM32H40-180 II

Other Motions (stops and index periods) available. Contact your IMC sales representative for more information.

Technical Specifications

Output Load Capacity – loads carried during index

Radial	3100 lbs
Thrust/Axial	8000 lbs
Moment	28,674 in-lbs

Typical Application Dial Diameter: 20 in. to 60 in.

Accuracy	±22 arcsec / ±.003" at 30" Radius
Repeatability	±5 arcsec / ±.0008" at 30" Radius

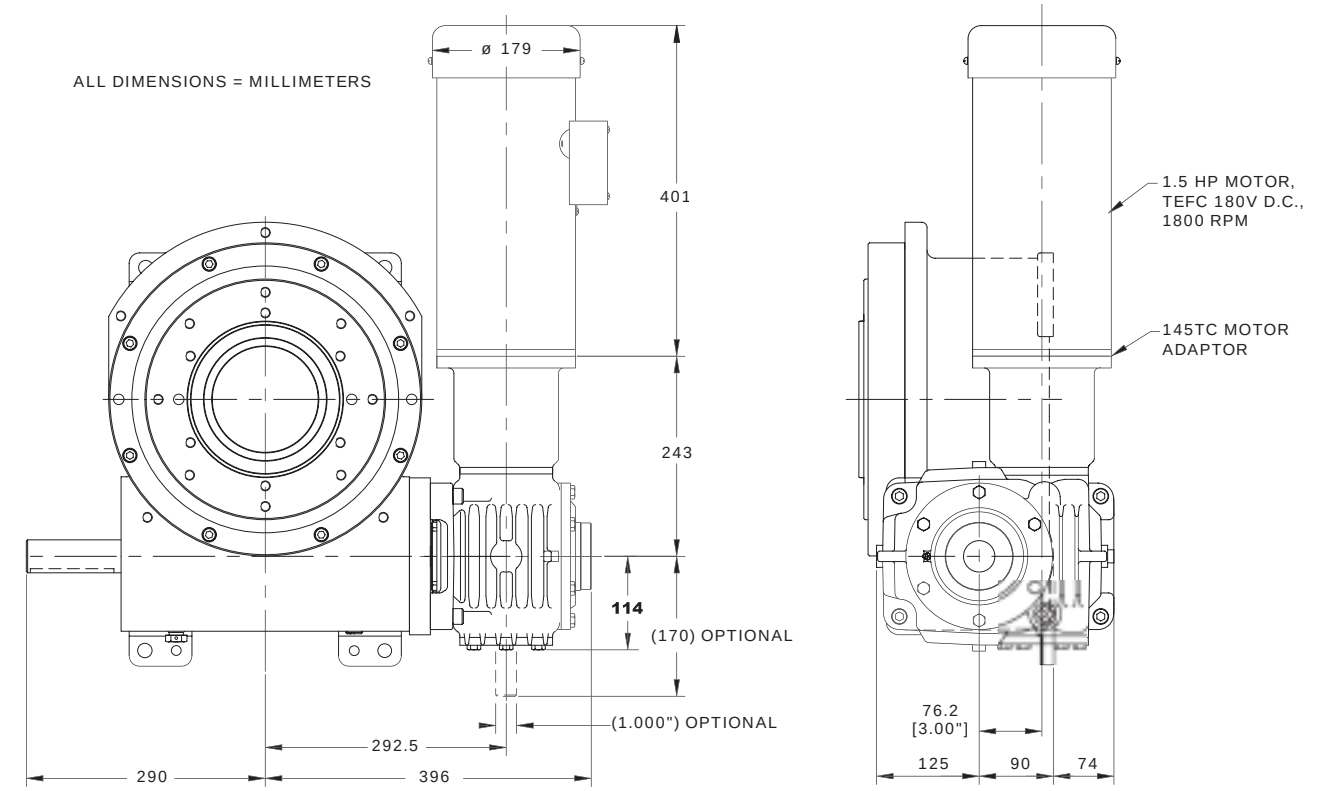

All dimensions are subject to change. For actual dimensions, please request the current drawing from IMC.

Standard Package

1100RDM Indexer with

- 7300C Reducer (Ratios from 5:1 to 60:1)
- Double Extended Camshaft (Input Shaft)
- Center Thru Hole (130 mm / 5.1 in. Diameter)
- 1.5 hp DC motor
- Varipak DC Motor Control (up to 30 cpm)
- Cycle Cam and Limit Switch Mounted to Camshaft
- Right Hand Cam

Optional Accessories

- KH47 Reducer and AC Motor with Optional Brake
- AC drive package with Inverter Duty Motor and Inverter Drive (up to 60 cpm)
- 7350C Heavy Duty Reducer (Ratios from 5:1 to 60:1)
- Stationary Center Post
- Dual Cam and Limit Switch
- Electric Clutch-Brake
- Air Clutch Brake
- 300IOC Input OLC
- Left Hand Cam
- Relief in Dwell for shot-pin applications
- Custom Dial Plate

1100RDM WITH OPTIONAL KH47 REDUCER

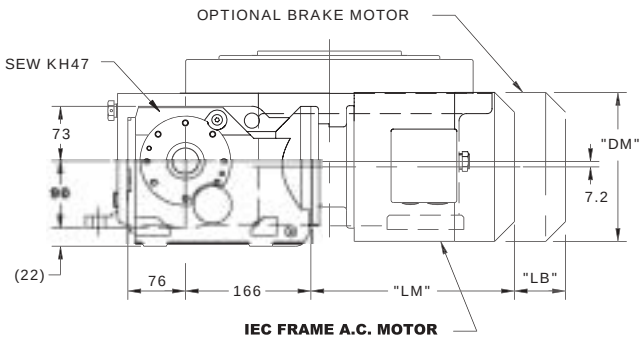

MOTOR FRAME	"DM"	"LM"	"LB"
IEC71	145	199	64
IEC80	145	249	64
IEC90	197	269	85
IEC100	197	319	85

All dimensions are subject to change. For actual dimensions, please request the current drawing from IMC.

B

1305RDM

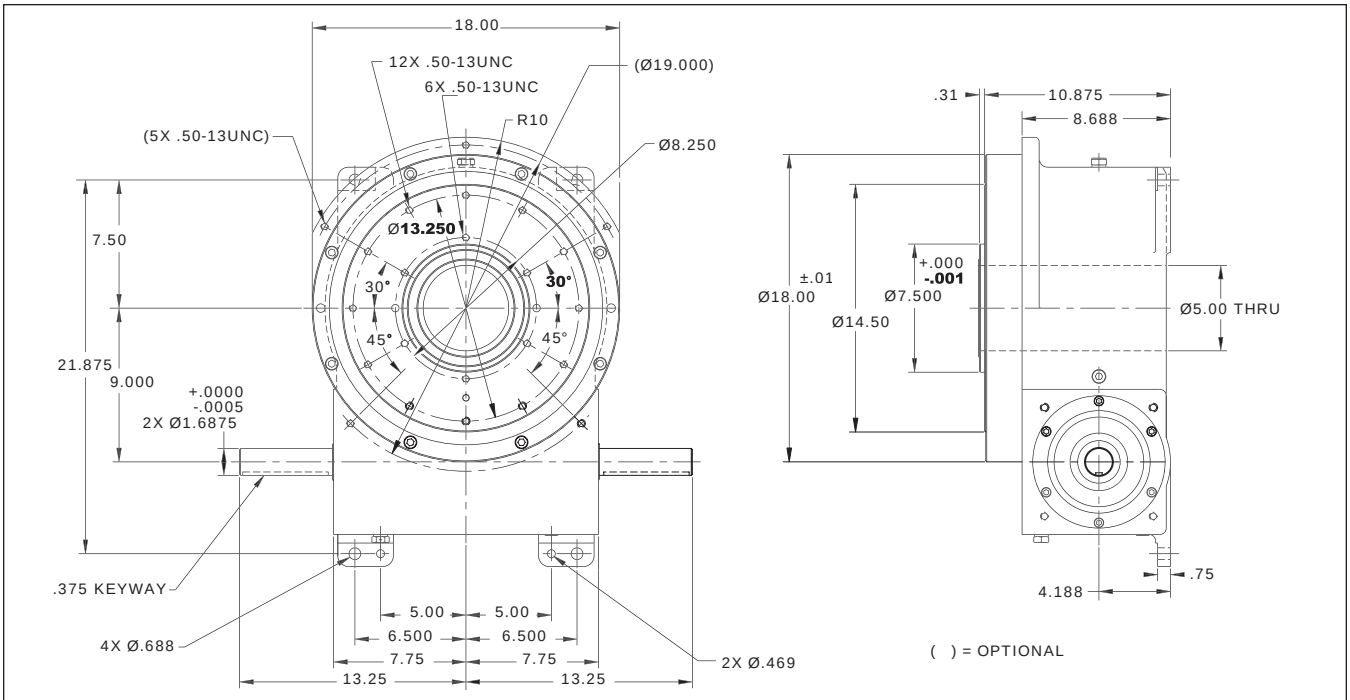

All dimensions are subject to change. For actual dimensions, please request the current drawing from IMC.

1305RDM Indexer Capacities

Stops (S)	Index Period (β)	Motion	B_{10} Capacity at 50 RPM (in-lb)	Internal Inertia (lb-in^2)	Model
2	330	msc.50	11374	4273	1305RDM2H40-330
3	330	msc.67	24389	4009	1305RDM3H48-330
4	330	msc.25	21640	4415	1305RDM4H48-330
6	270	ms	24014	4415	1305RDM6H48-270
8	270	msc.33	29334	4486	1305RDM8H48-270
8	180	ms	24607	4344	1305RDM8H40-180
12	270	ms	24919	4415	1305RDM12H48-270
	180	ms	27372	4415	1305RDM12H48-180
	120	ms	28835	4415	1305RDM12H48-120
16	270	ms	26692	4486	1305RDM16H48-270
	180	ms	29538	4486	1305RDM16H48-180
	120	msc.33	36506	4486	1305RDM16H48-120
24	270	ms	33371	4415	1305RDM24H48-270 II
	180	ms	36568	4415	1305RDM24H48-180 II
32	270	ms	36514	4486	1305RDM32H48-270 II
	180	ms	40186	4486	1305RDM32H48-180 II
4	360	c.v.	6743	4415	1305RDM0H48-360 4:1
6	360	c.v.	7381	4415	1305RDM0H48-360 6:1
8	360	c.v.	7755	4486	1305RDM0H48-360 8:1
12	360	c.v.	7830	4415	1305RDM0H48-360 12:1

Other Motions (stops and index periods) available. Contact your IMC sales representative for more information.

Technical Specifications

Output Load Capacity – loads carried during index

Radial	4,650 lbs
Thrust/Axial	11,650 lbs
Moment	34,850 in.-lbs

Typical Application Dial Diameter: 20 in. to 72 in.

Accuracy	±38 arcsec / ±.007" at 36" Radius
Repeatability	±10 arcsec / ±.002" at 36" Radius

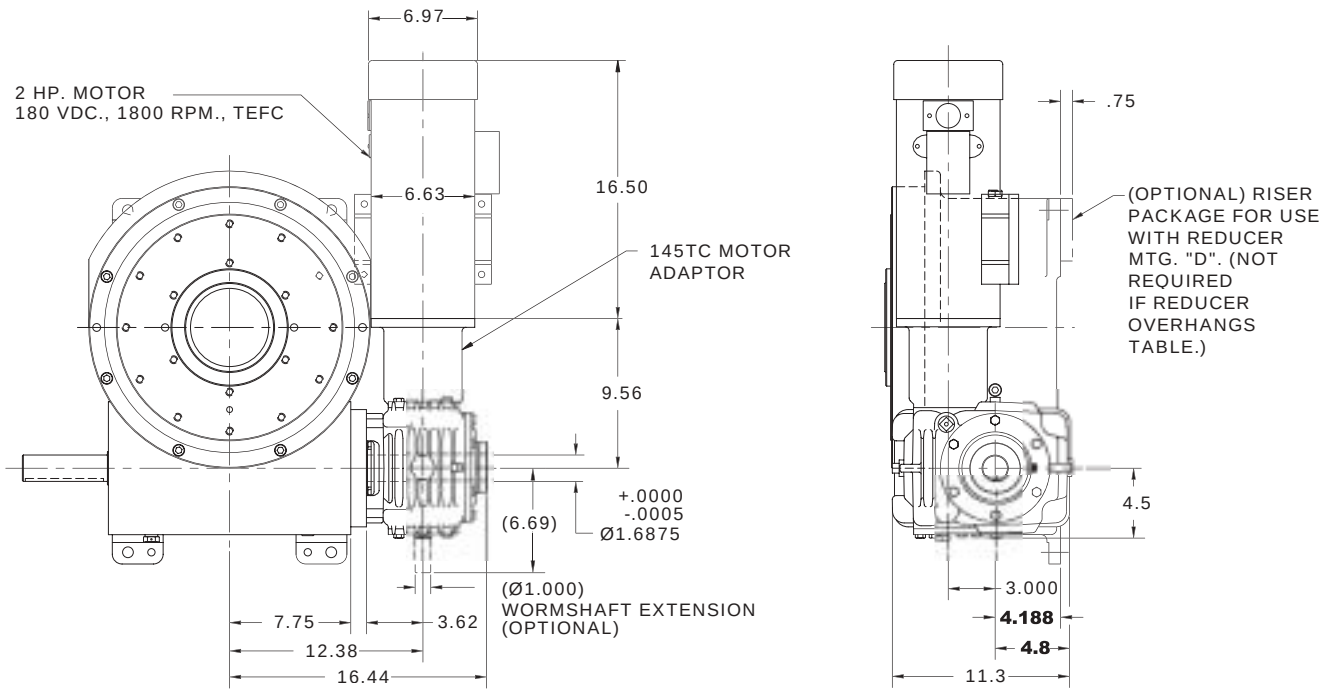

All dimensions are subject to change. For actual dimensions, please request the current drawing from IMC.

Standard Package

1305RDM Indexer with

- 7300C Reducer (Ratios from 5:1 to 60:1)
- Double Extended Camshaft (Input Shaft)
- Center Thru Hole (5.00 in. Diameter)
- 2 hp DC Motor
- Varipak DC Motor Control (up to 30 cpm)
- Cycle Cam and Limit Switch Mounted to Camshaft
- Right Hand Cam

Optional Accessories

- 2 hp AC Drive Package with Inverter Duty Motor and Inverter Drive (up to 60 cpm)
- 7350C Heavy Duty Reducer (Ratios from 5:1 to 60:1)
- Output Overload Clutch model 32D
  - Available Settings (in-lbs): 8500, 13000, 20000, 31000
- Stationary Center Post
- Dual Cam and Limit Switch
- Base Riser Blocks
- Electric Clutch-Brake
- Air Clutch-Brake
- 300IOC or 350IOC Input OLC
- Left Hand Cam
- Relief in Dwell for shot-pin applications
- Custom Dial Plate

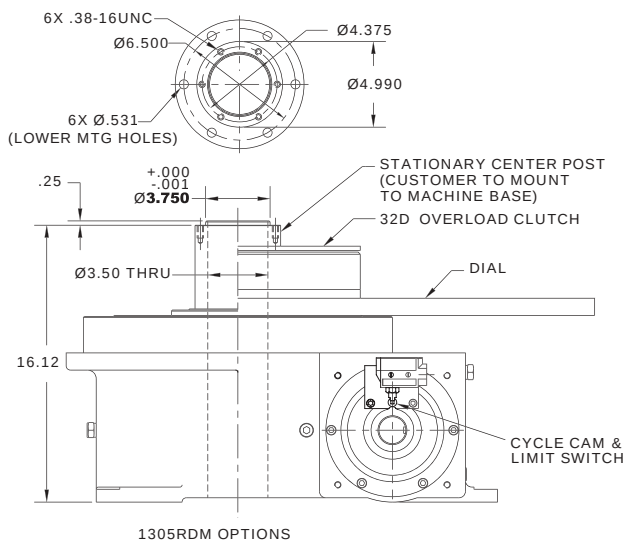

1305RDM OPTIONS

All dimensions are subject to change. For actual dimensions, please request the current drawing from IMC.

B

1800RDM

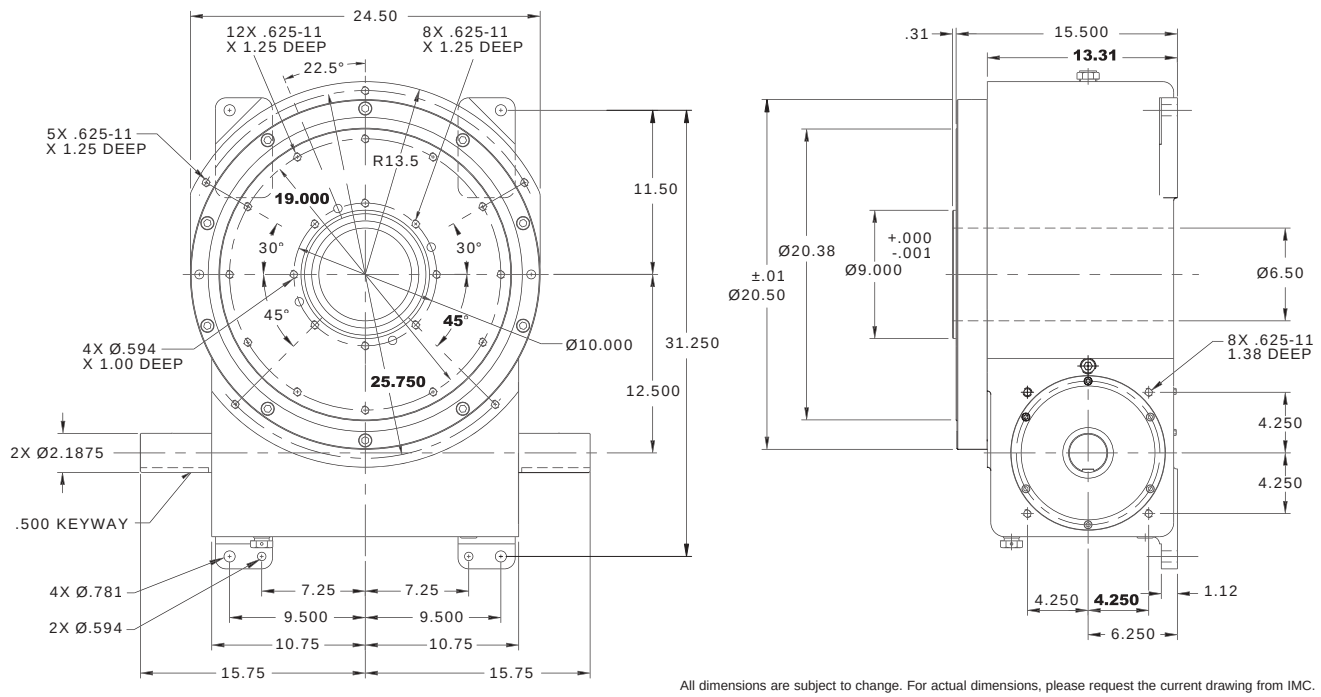

All dimensions are subject to change. For actual dimensions, please request the current drawing from IMC.

1800RDM Indexer Capacities

Stops (S)	Index Period (β)	Motion	B_{10} Capacity at 50 RPM (in-lb)	Internal Inertia (lb-in^2)	Model
2	330	msc.50	27554	18407	1800RDM2H56-330
3	330	msc.33	48803	18407	1800RDM3H64-330
4	330	msc.25	56570	18407	1800RDM4H64-330
6	270	ms	64301	18407	1800RDM6H64-270
8	270	ms	64868	18985	1800RDM8H64-270
12	270	ms	71214	18407	1800RDM12H64-270
	180	ms	77925	18407	1800RDM12H64-180
	120	ms	81918	18407	1800RDM12H64-120
16	270	ms	64035	18985	1800RDM16H64-270
	180	ms	71219	18985	1800RDM16H64-180
	120	msc.33	86845	18407	1800RDM16H64-120
24	270	ms	86546	18407	1800RDM24H64-270 II
	180	ms	93113	18985	1800RDM24H64-180 II
32	270	ms	86288	18985	1800RDM32H64-270 II
	180	ms	96447	18985	1800RDM32H64-180 II
4	360	c.v.	15430	18985	1800RDM0H64-360 4:1
6	360	c.v.	16867	18985	1800RDM0H64-360 6:1
8	360	c.v.	17710	18985	1800RDM0H64-360 8:1
12	360	c.v.	17875	18985	1800RDM0H64-360 12:1
16	360	c.v.	18410	18985	1800RDM0H64-360 16:1

Other Motions (stops and index periods) available. Contact your IMC sales representative for more information.

Technical Specifications

Output Load Capacity – loads carried during index

Radial	5,850 lbs
Thrust/Axial	14,550 lbs
Moment	61,200 in.-lbs

Typical Application Dial Diameter: 26 in. to 96 in.

Accuracy	±27 arcsec / ±.006" at 48" Radius
Repeatability	±7 arcsec / ±.0016" at 48" Radius

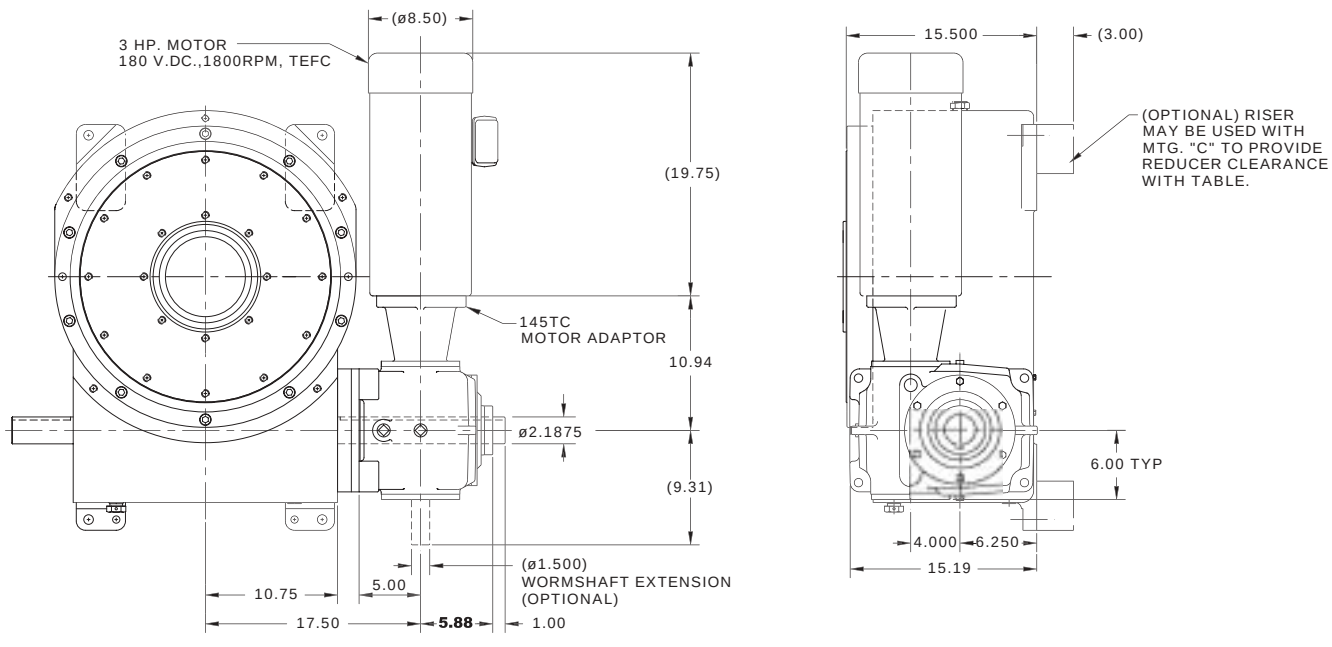

All dimensions are subject to change. For actual dimensions, please request the current drawing from IMC.

Standard Package

1800RDM Indexer with

- 7400C Reducer (Ratios from 5:1 to 60:1)
- Double Extended Camshaft (Input Shaft)
- Center Thru Hole (6.50 in. Diameter)
- 3 hp DC Motor
- Cycle Cam and Limit Switch Mounted to Camshaft
- Right Hand Cam

Optional Accessories

- 2 or 3 hp AC Drive Package with Inverter Duty Motor and Inverter Drive (up to 60 cpm)
- 2 hp DC Motor with Varipak DC Motor Control (up to 30 cpm)
- 7500C Heavy Duty Reducer (Ratios from 5:1 to 60:1)
- Output Overload Clutch model 61D
  - Available Settings (in-lbs): 23000, 36000, 44000, 50000, 60000
- Stationary Center Post
- Dual Cam and Limit Switch
- Base Riser Blocks
- Electric Clutch-Brake
- Air Clutch-Brake
- 400IOC or 500IOC Input OLC
- Left Hand Cam
- Relief in Dwell for shot-pin applications
- Custom Dial Plate

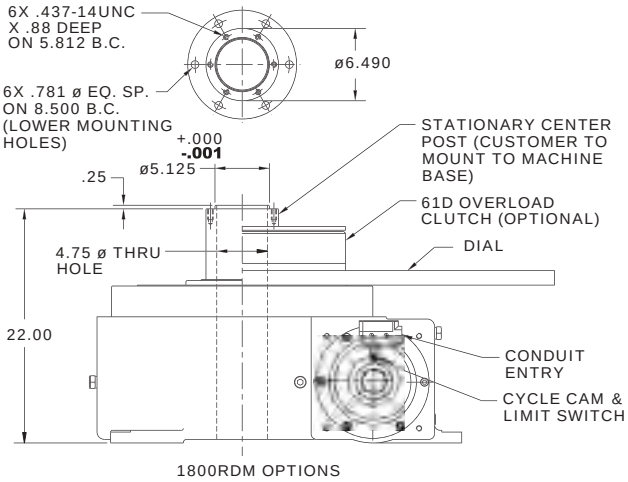

All dimensions are subject to change. For actual dimensions, please request the current drawing from IMC.

Indexer Ordering Procedure

1. Model
2. Input Shaft Configuration
   - Side 1
   - Side 2
   - Double Input – DI (Standard)
3. Cam Lead (Helix)
   - Right Hand (Standard)
   - Left Hand

NOTE: Input may rotate in either direction to achieve desired direction of output rotation.

4. Indexer Mounting Position: 1-6

Position of Shafts

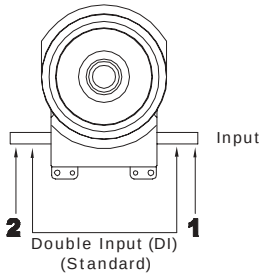

Cam Lead

Right Hand	Left Hand
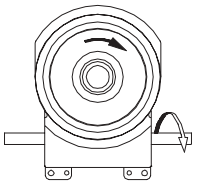	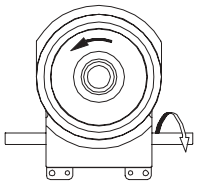

Indexer Mounting Position

1 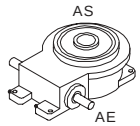	2 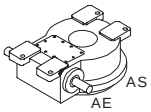
3 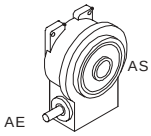	4 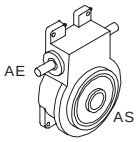
5 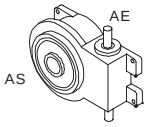	6 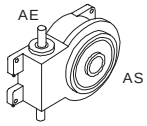
AE: Input Shaft	AS: Output Shaft

Reducer Ordering Procedure

1. Model
2. Ratio
   - 5:1, 10:1, 15:1, 20:1, 25:1, 30:1, 40:1, 50:1, 60:1
3. Motor Adapter
4. Reducer Input Shaft Extension
   - Single Input (SE) or Double Input (DE)
5. Mounting
   - Mounting Position A, B, C, or D
   - Mounted on Indexer Side 1 or Side 2
6. Input Shaft Orientation
   - Left or Right (See Diagram Below)

* **Consult IMC for availability of this mounting**

Reducer Mounting Position

A-1-RH	B-1-RH	B-1-LH	A-1-LH	C-1-RH	D-1-LH	C-1-LH	D-1-RH
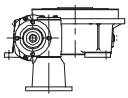	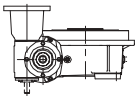	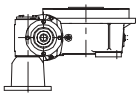	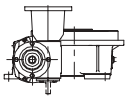	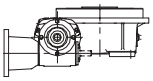	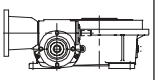	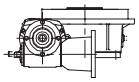	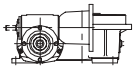
A-2-LH	**B-2-LH**	**B-2-RH**	**A-2-RH**	**C-2-LH**	**D-2-RH**	**C-2-RH**	**D-2-LH**
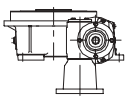	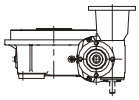	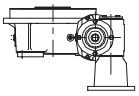	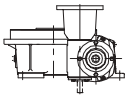	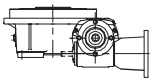	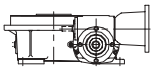	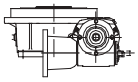	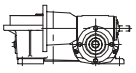

RD & Intermittor Index Drives

INDUSTRIAL MOTION CONTROL, LLC.

CAMCO FERGUSON

Features

IMC Roller Dial Index Drives offer superior load capabilities making them ideal for medium to high torque applications. Other features include:

- Short camshaft motion periods, due to oversized roller gear cam design, are well suited for continuous running applications or for special motion requirements such as oscillating motions.
- Universal mounting including a horizontal mounting ideal for trunion applications.
- Option Center Thru-Hole facilitates passage of electrical wiring, pneumatic lines or mechanical linkages.
- Optional Stationary Center Post with Thru Hole provides mounting for upper tool plate.

The RD and Intemittor Series Index Drives have a robust, flexible design with features ideal for continuous-running applications and applications requiring complex motions.

C

425RD

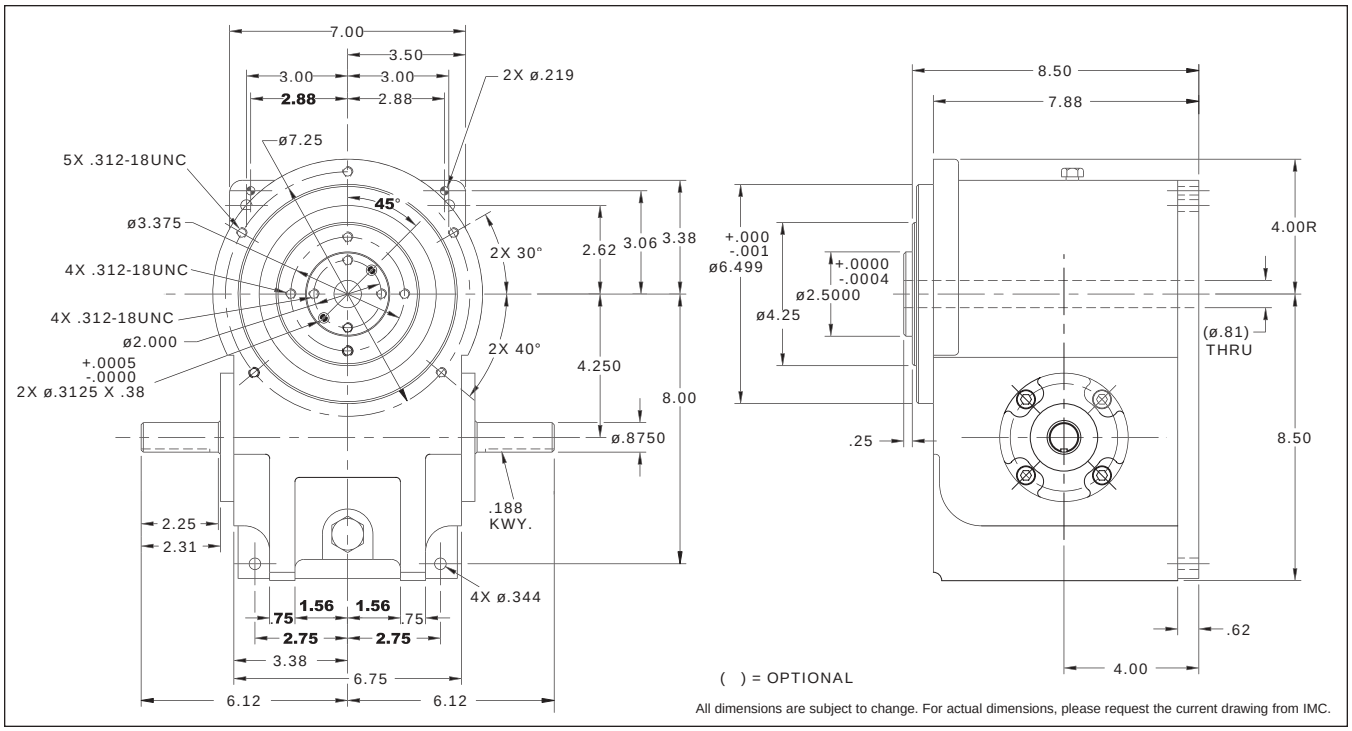

425RD Indexer Capacities

Stops (S)	Index Period (β)	Motion	B_{10} Capacity at 50 RPM (in-lb)	Internal Inertia (lb-in²)	Model
2.0	300	ms	2,049	23	425RD2H32-300
3.0	270	ms	2,536	23	425RD3H32-270
	180	ms	2,681	23	425RD3H32-180
4.0	270	ms	2,899	25	425RD4H32-270
	180	ms	3,135	25	425RD4H32-180
6.0	270	ms	2,652	23	425RD6H32-270
	180	ms	2,963	23	425RD6H32-180
	120	ms	3,166	23	425RD6H32-120
	90	ms	3,234	23	425RD6H32-90
8.0	270	ms	2,999	25	425RD8H32-270
	180	ms	3,354	25	425RD8H32-180
	120	ms	3,648	25	425RD8H32-120
	90	ms	3,830	25	425RD8H32-90
12.0	270	ms	2,300	22	425RD12H24-270
	180	ms	2,581	22	425RD12H24-180
	120	ms	2,871	22	425RD12H24-120
	90	ms	3,070	22	425RD12H24-90
16.0	270	ms	4,101	25	425RD16H32-270 II
	180	ms	4,622	25	425RD16H32-180 II
	120	ms	5,100	0	425RD16H32-120 II

Other Motions (stops and index periods) available. Contact your IMC sales representative for more information.

Technical Specifications

Output Load Capacity – loads carried during index

Radial	2,700 lbs
Thrust/Axial	1,600 lbs
Moment	5,800 in.-lbs

Accuracy	±47 arcsec / ±.0027" at 12" Radius
Repeatability	±12 arcsec / ±.0007" at 12" Radius

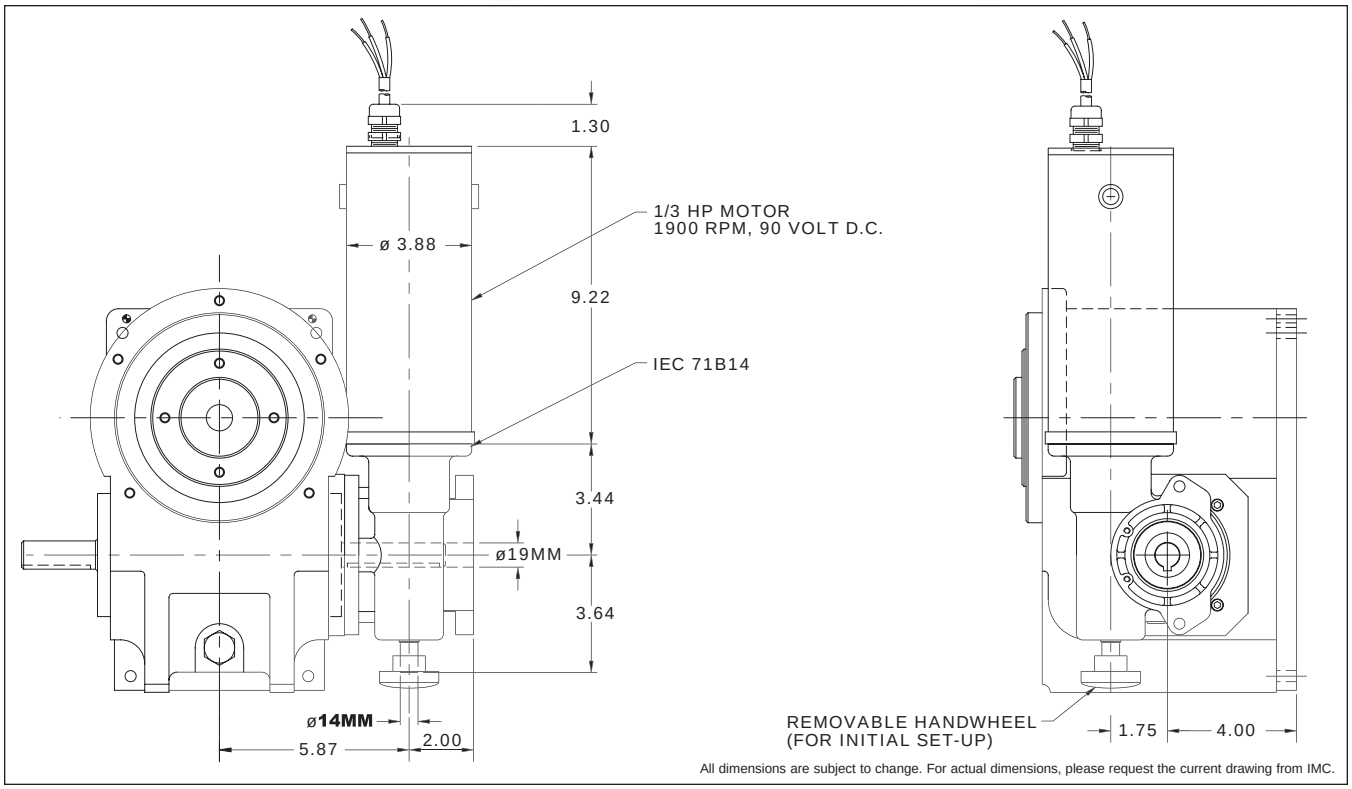

All dimensions are subject to change. For actual dimensions, please request the current drawing from IMC.

Standard Package

425RD Indexer with

- R180 Reducer (ratios from 5:1 to 60:1)
  - Double Extended Worm Shaft (Input)
  - Worm Shaft Handwheel
- Double Extended Camshaft (Input Shaft)
- 1/3 hp DC Motor
- Varipak DC Motor Control (up to 30 cpm)
- Cycle Cam and Limit Switch Mounted to Camshaft
- Right Hand Cam

Optional Accessories

- 1/3 hp AC Drive Package with Inverter Duty Motor and Inverter Drive (up to 60 cpm)
- R225 Reducer with 1 hp AC or DC Motor (ratios of 5:1 to 60:1)
- 2.8D Output Overload Clutch
  - Available Settings (in-lbs): 400, 480, 700, 850, 1100, 1300, 1800, 2200, 3100
- Center Thru Hole (0.81 in. Diameter)
- Stationary Center Post
- Dual Cam and Limit Switch
- Electric Clutch-Brake
- 180IOC or 225IOC Input OLC
- Left Hand Cam
- Relief in Dwell for shot-pin applications
- Universal Mounting Capability
- Custom Dial Plate

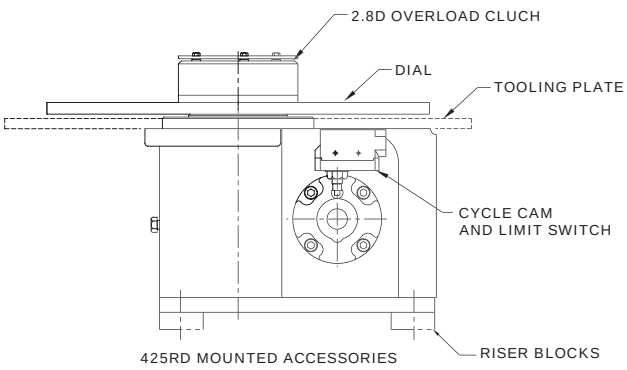

425RD MOUNTED ACCESSORIES

All dimensions are subject to change. For actual dimensions, please request the current drawing from IMC.

C

800RD

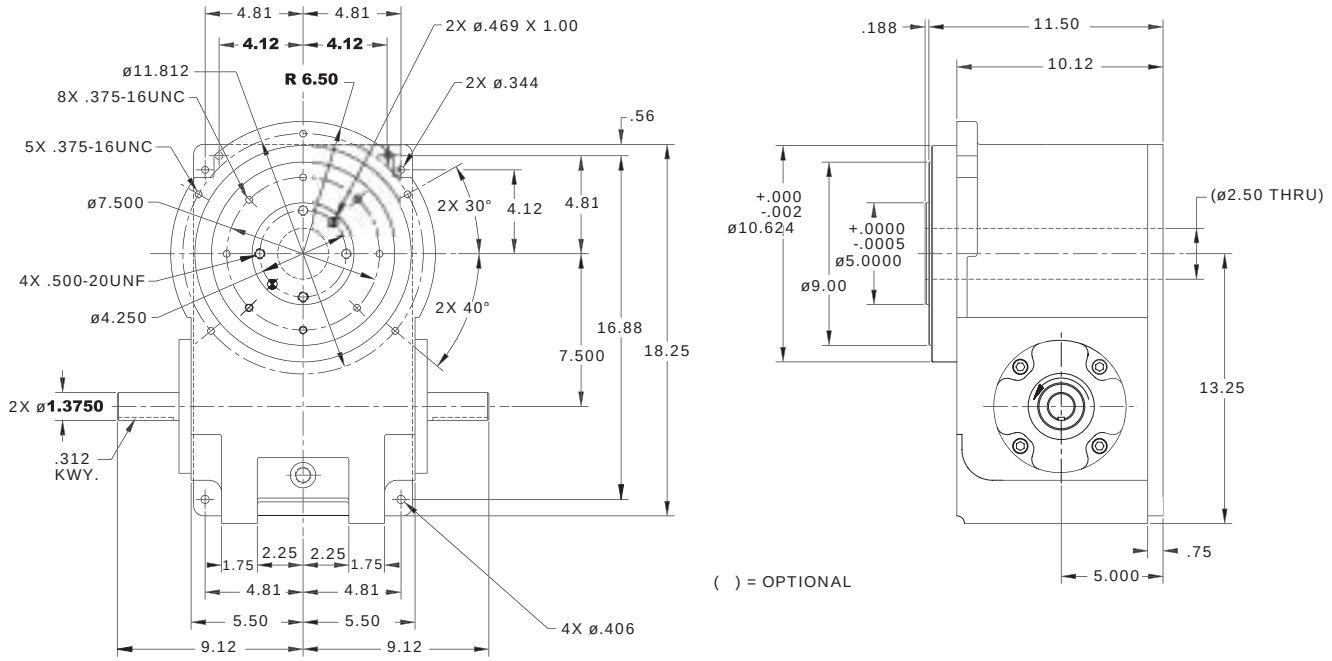

All dimensions are subject to change. For actual dimensions, please request the current drawing from IMC.

800RD Indexer Capacities

Stops (S)	Index Period (β)	Motion	B_{10} Capacity at 50 RPM (in-lb)	Internal Inertia (lb-in²)	Model
2.0	270	msc.33	18,008	664	800RD2H64-270 MSC .33
3.0	270	ms	18,653	664	800RD3H64-270
	180	ms	19,387	664	800RD3H64-180
4.0	270	ms	22,261	714	800RD4H64-270
	180	ms	17,874	714	800RD4H56-180
6.0	270	ms	19,416	664	800RD6H64-270
	180	ms	21,422	664	800RD6H64-180
	120	ms	23,000	664	800RD6H64-120
8.0	270	ms	22,016	714	800RD8H64-270
	180	ms	24,499	714	800RD8H64-180
	120	ms	26,708	714	800RD8H64-120
12.0	270	ms	13,394	639	800RD12H48-270
	180	ms	15,016	639	800RD12H48-180
	120	ms	12,735	581	800RD12H40-120
16.0	270	ms	30,320	664	800RD16H64-270 II
	180	ms	33,885	664	800RD16H64-180 II
	120	ms	36,987	664	800RD16H64-120 II
24.0	270	ms	18,205	639	800RD24H48-270 II
	180	ms	20,610	639	800RD24H48-180 II
	120	ms	17,394	581	800RD24H40-120 II

Other Motions (stops and index periods) available. Contact your IMC sales representative for more information.

Technical Specifications

Output Load Capacity – loads carried during index

Radial	4,900 lbs
Thrust/Axial	3,500 lbs
Moment	22,300 in.-lbs

Accuracy	±30 arcsec / ±.004" at 24" Radius
Repeatability	±8 arcsec / ±.0009" at 24" Radius

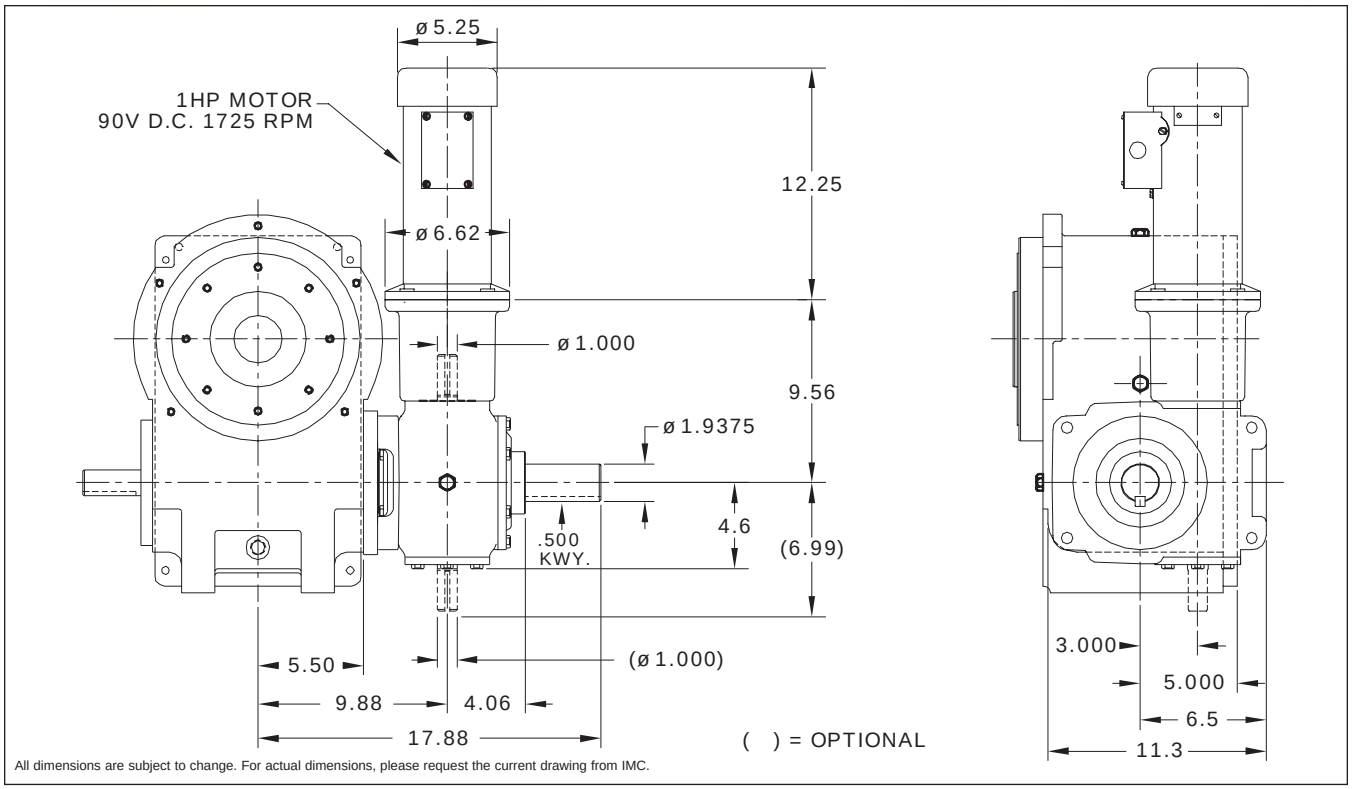

All dimensions are subject to change. For actual dimensions, please request the current drawing from IMC.

Standard Package

800RD Indexer with

- 7300C Reducer (Ratios from 5:1 to 60:1)
  - Double Extended Worm Shaft (Input)
  - Motor Adapter and Coupling
- Double Extended Camshaft (Input Shaft)
- 1 hp DC Motor
- Varipak DC Motor Control (up to 30 cpm)
- Cycle Cam and Limit Switch Mounted to Camshaft
- Right Hand Cam

Optional Accessories

- 1 hp AC Drive Package with Inverter Duty Motor and Inverter Drive (up to 60 cpm) [change]
- 7350C Reducer (ratios from 5:1 to 60:1) with 1 hp AC or DC Motor
- Output Overload Clutch model 7.8D
  - Available Settings (in-lbs): 1400, 1700, 2600, 3200, 4200, 5000, 7200, 10,000
- Output Overload Clutch model 18D
  - Available Settings (in-lbs): 5000, 7000, 7800, 10,000, 12,000, 16,000, 19,000, 21,000, 27,000, 42,000, 45,000
- Center Thru Hole (2.50 in. Diameter)
- Stationary Center Post
- Dual Cam and Limit Switch
- Electric Clutch-Brake
- Air Clutch-Brake
- 300IOC or 350IOC Input OLC
- Left Hand Cam
- Relief in Dwell for shot-pin applications
- Universal Mounting Capability
- Custom Dial Plate

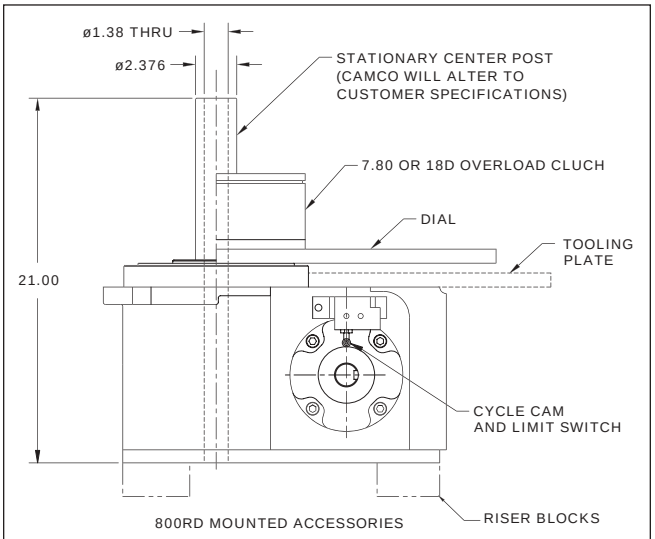

800RD MOUNTED ACCESSORIES

All dimensions are subject to change. For actual dimensions, please request the current drawing from IMC.

C

1301RD

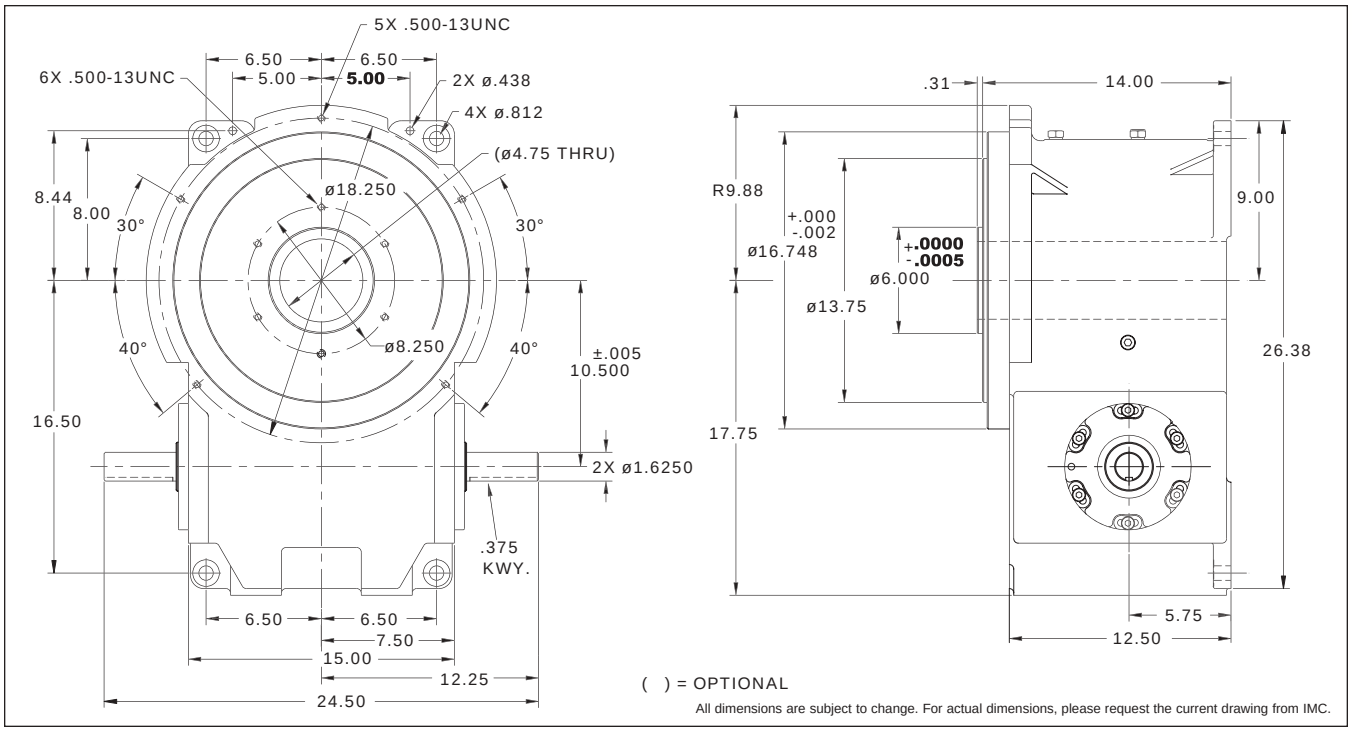

1301RD Indexer Capacities

Stops (S)	Index Period (β)	Motion	B_{10} Capacity at 50 RPM (in-lb)	Internal Inertia (lb-in²)	Model
2.0	270	ms	19,022	1,987	1301RD2H64-270
3.0	270	ms	27,856	2,094	1301RD3H64-270
4.0	270	ms	32,613	2,094	1301RD4H64-270
6.0	270	ms	37,310	2,094	1301RD6H64-270
	180	msc.33	45,088	2,094	1301RD6H64-180
8.0	270	ms	31,686	1,987	1301RD8H56-270
	180	ms	26,139	1,793	1301RD8H48-180
	120	ms	48,877	2,094	1301RD8H64-120
12.0	270	ms	36,956	2,094	1301RD12H64-270
	180	ms	41,200	2,094	1301RD12H64-180
	120	ms	45,113	2,094	1301RD12H64-120
16.0	270	ms	31,015	1,987	1301RD16H56-270
	180	ms	34,742	1,987	1301RD16H56-180
	120	ms	28,733	1,793	1301RD16H48-120
24.0	270	ms	51,559	2,094	1301RD24H64-270 II
	180	ms	57,777	2,094	1301RD24H64-180 II
	120	ms	63,438	2,094	1301RD24H64-120 II

Other Motions (stops and index periods) available. Contact your IMC sales representative for more information.

Technical Specifications

Output Load Capacity – loads carried during index

Radial	15,800 lbs
Thrust/Axial	10,800 lbs
Moment	109,000 in.-lbs

Accuracy	±39 arcsec / ±.0068" at 36" Radius
Repeatability	±10 arcsec / ±.0017" at 36" Radius

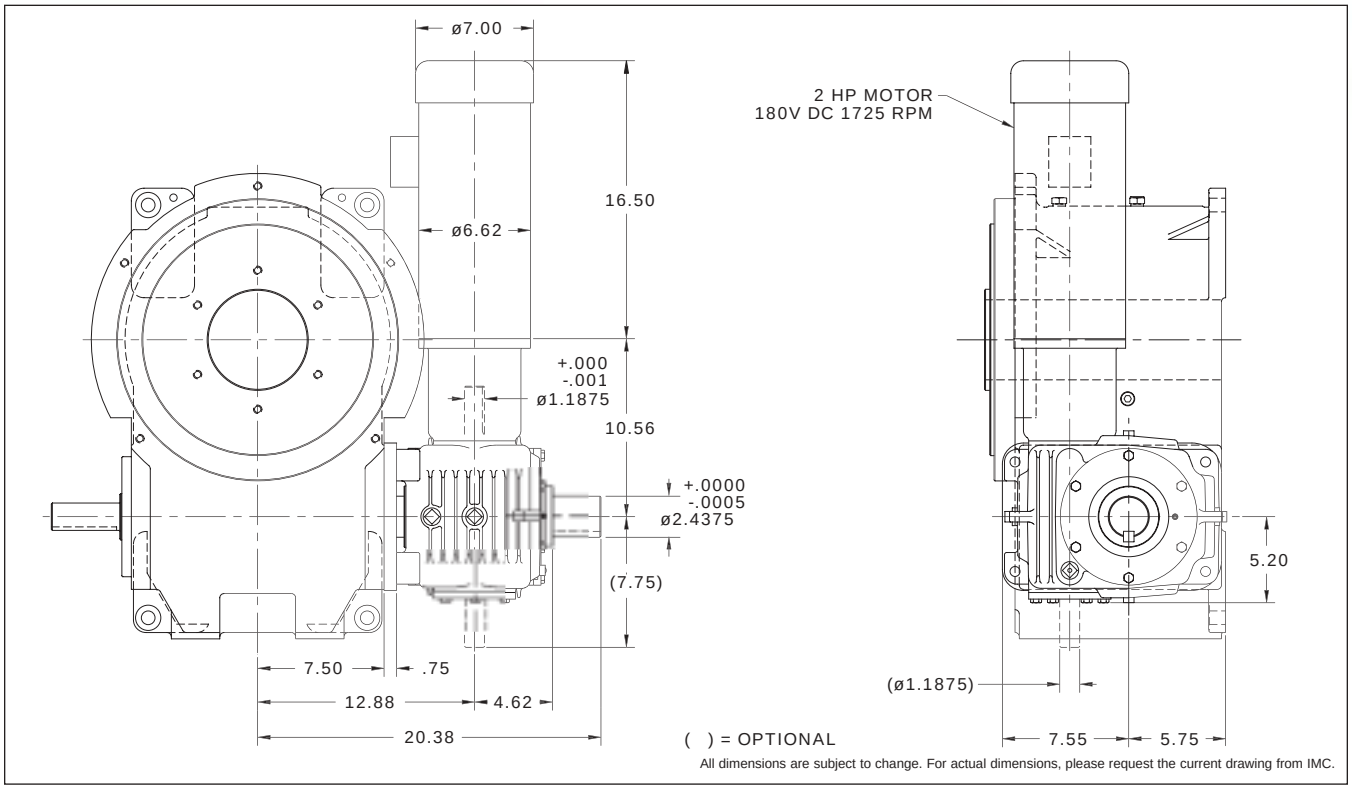

Standard Package

1301RD Indexer with

- 7350C Reducer (Ratios from 5:1 to 60:1)
  - Double Extended Worm Shaft (Input)
  - Motor Adapter and Coupling
- Double Extended Camshaft (Input Shaft)
- 2 hp DC Motor
- Varipak DC Motor Control (up to 30 cpm)
- Cycle Cam and Limit Switch Mounted to Camshaft
- Right Hand Cam

Optional Accessories

- 2 hp AC Drive Package with Inverter Duty Motor and Inverter Drive (up to 60 cpm)
- 7400C Reducer (Ratios from 5:1 to 60:1) with Motor Adapter and Coupling
- Output Overload Clutch model 31D
  - Available Settings (in-lbs): 8500, 13,000, 20,000, 31,000
- Center Thru Hole (4.75 in. Diameter)
- Stationary Center Post
- Dual Cam and Limit Switch
- Electric Clutch-Brake
- Air Clutch-Brake
- 350IOC or 400IOC Input OLC
- Left Hand Cam
- Relief in Dwell for shot-pin applications
- Universal Mounting Capability
- Custom Dial Plate

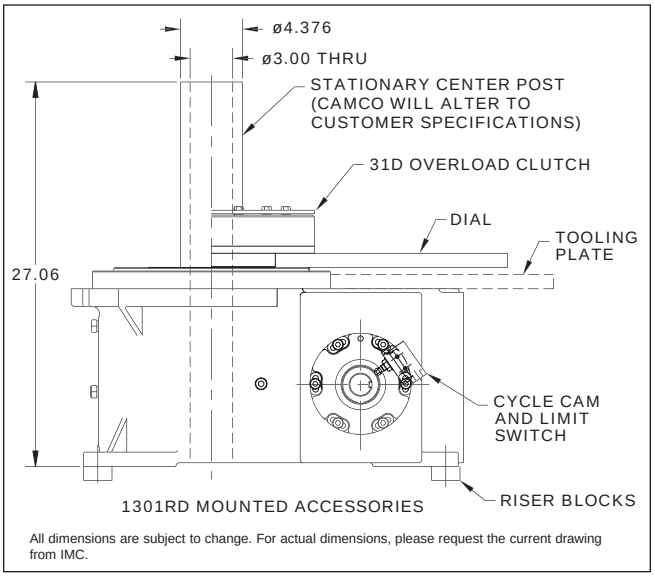

C

1801RD

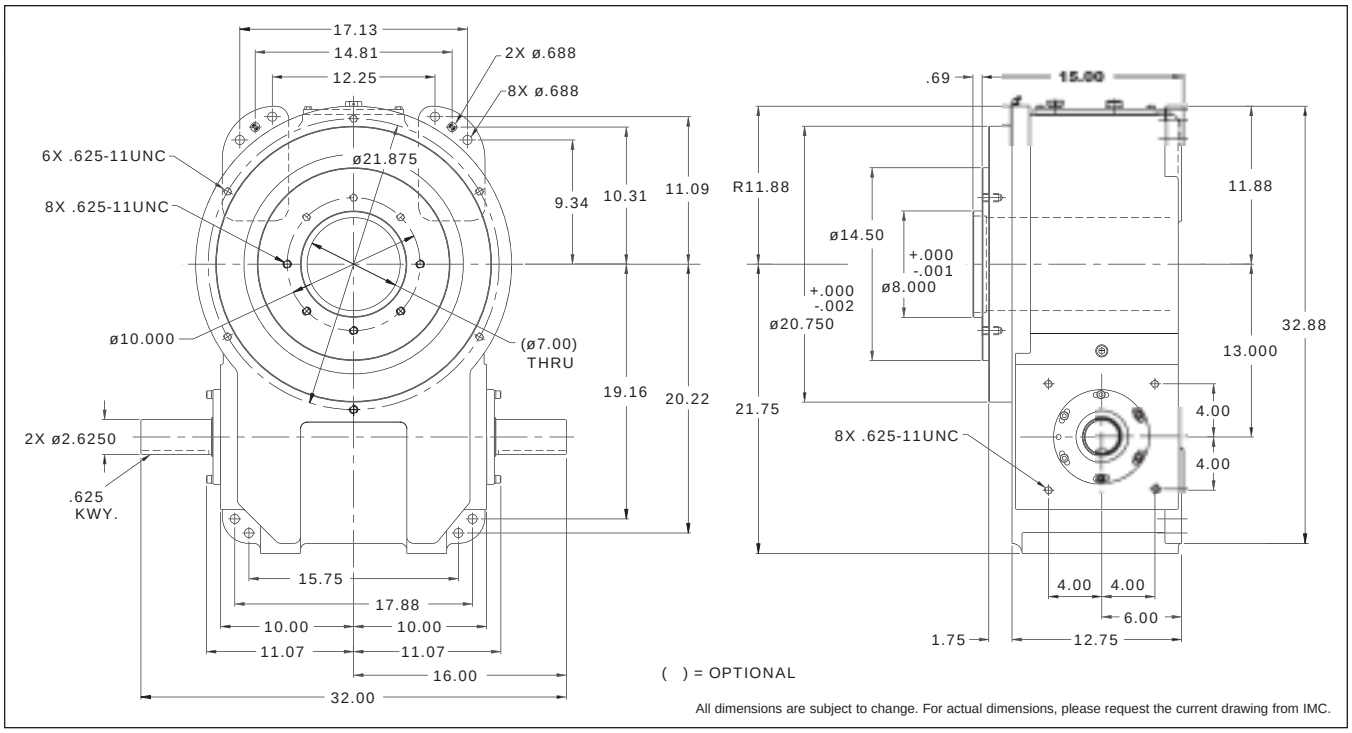

All dimensions are subject to change. For actual dimensions, please request the current drawing from IMC.

1801RD Indexer Capacities

Stops (S)	Index Period (β)	Motion	B_{10} Capacity at 50 RPM (in-lb)	Internal Inertia (lb-in²)	Model
2.0	330	msc.67	50,905	6,718	1801RD2H64-330 MSC .67
3.0	270	msc.33	48,963	6,718	1801RD3H64-270 MSC .33
4.0	270	ms	40,633	6,718	1801RD4H64-270
	180	msc.50	57,344	6,718	1801RD4H64-180 MSC .50
6.0	270	ms	92,427	7,672	1801RD6H80-270
	180	msc.50	120,548	7,672	1801RD6H80-180 MSC .50
	120	msc.50	90,444	6,718	1801RD6H64-120 MSC .50
8.0	270	ms	66,038	7,090	1801RD8H64-270
	180	msc.33	80,281	7,090	1801RD8H64-180 MSC .33
	120	msc.33	61,376	6,222	1801RD8H56-120 MSC .33
12.0	270	ms	125,722	8,963	1801RD12H96-270
	180	ms	141,136	8,963	1801RD12H96-180
	120	ms	112,949	7,672	1801RD12H80-120
16.0	270	ms	94,125	8,371	1801RD16H80-270
	180	msc.33	118,052	7,090	1801RD16H80-180 MSC .33
	120	ms	80,638	7,090	1801RD16H64-120
24.0	270	ms	170,392	8,963	1801RD24H96-270 II
	180	ms	191,240	8,963	1801RD24H96-180 II
	120	ms	141,038	7,672	1801RD24H80-120 II

Other Motions (stops and index periods) available. Contact your IMC sales representative for more information.

Technical Specifications

Output Load Capacity – loads carried during index

Radial	14,800 lbs
Thrust/Axial	12,600 lbs
Moment	107,000 in.-lbs

Accuracy	±27 arcsec / ±.0063" at 48" Radius
Repeatability	±7 arcsec / ±.0016" at 48" Radius

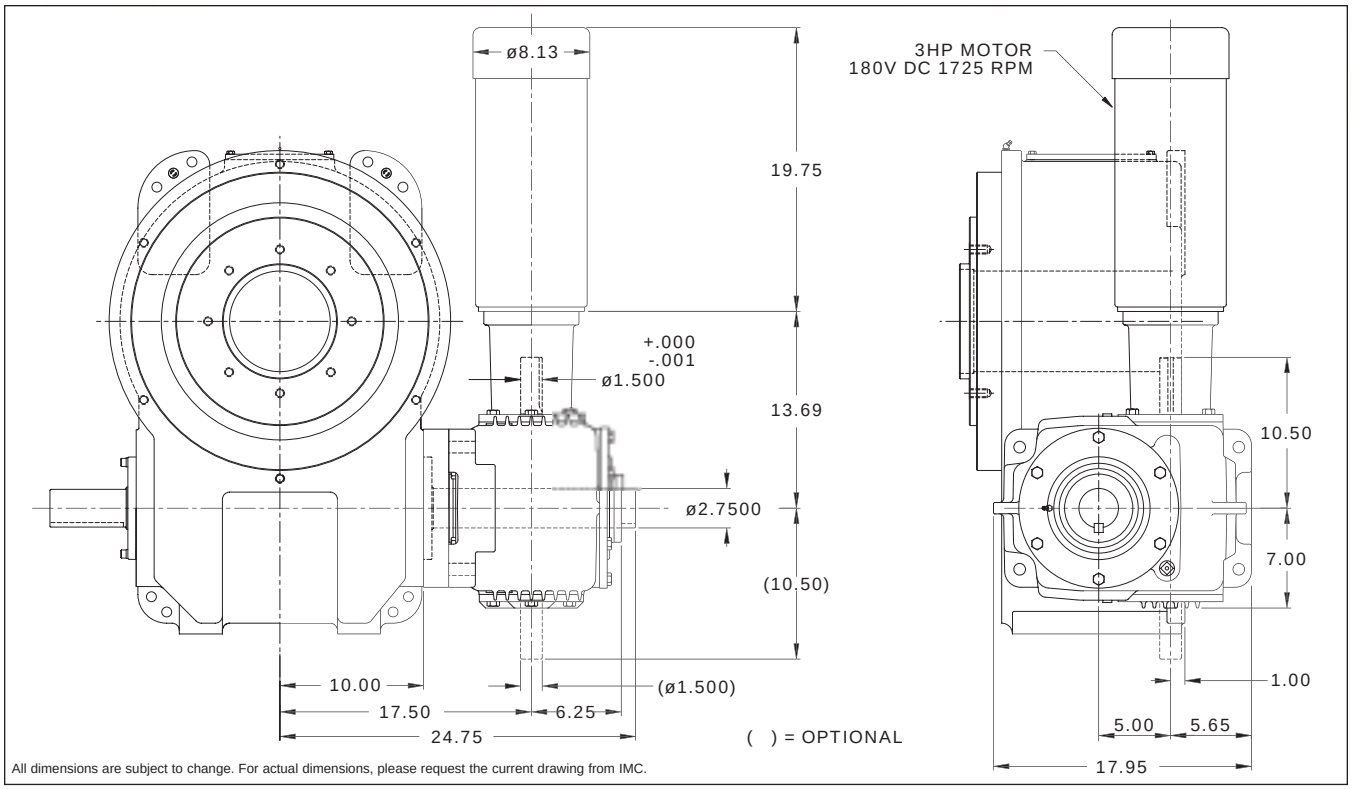

All dimensions are subject to change. For actual dimensions, please request the current drawing from IMC.

Standard Package

1801RD Indexer with

- 7500C Reducer (Ratios from 5:1 to 60:1)
  - Double Extended Worm Shaft (Input)
  - Motor Adapter and Coupling
- Double Extended Camshaft (Input Shaft)
- 3 hp DC Motor
- Cycle Cam and Limit Switch Mounted to Camshaft
- Right Hand Cam

Optional Accessories

- 3 hp AC Drive Package with Inverter Duty Motor and Inverter Drive (up to 60 cpm)
- 7600C or 7700C Reducer (Ratios from 5:1 to 60:1) with Motor Adapter and Coupling
- Output Overload Clutch model 62D
  - Available Settings (in-lbs): 23,000, 36,000, 44,000, 50,000, 60,000
- Center Thru Hole (7.00 in. Diameter)
- Stationary Center Post
- Dual Cam and Limit Switch
- Electric Clutch-Brake
- Air Clutch-Brake
- 500IOC, 600IOC or 700IOC Input OLC
- Left Hand Cam
- Relief in Dwell for shot-pin applications
- Custom Dial Plate

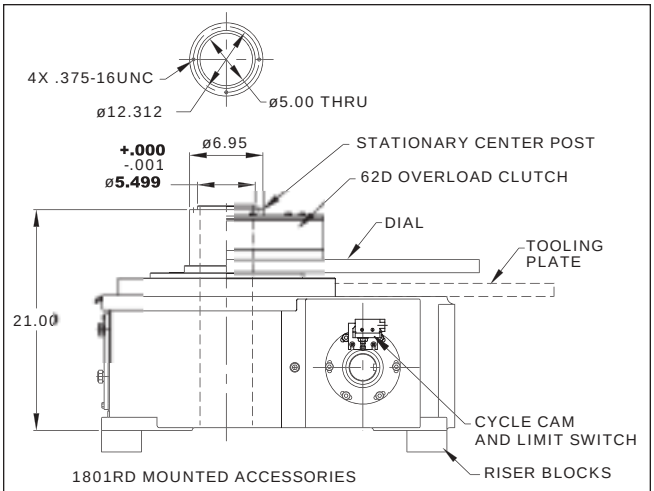

1801RD MOUNTED ACCESSORIES

All dimensions are subject to change. For actual dimensions, please request the current drawing from IMC.

122 Intermittor

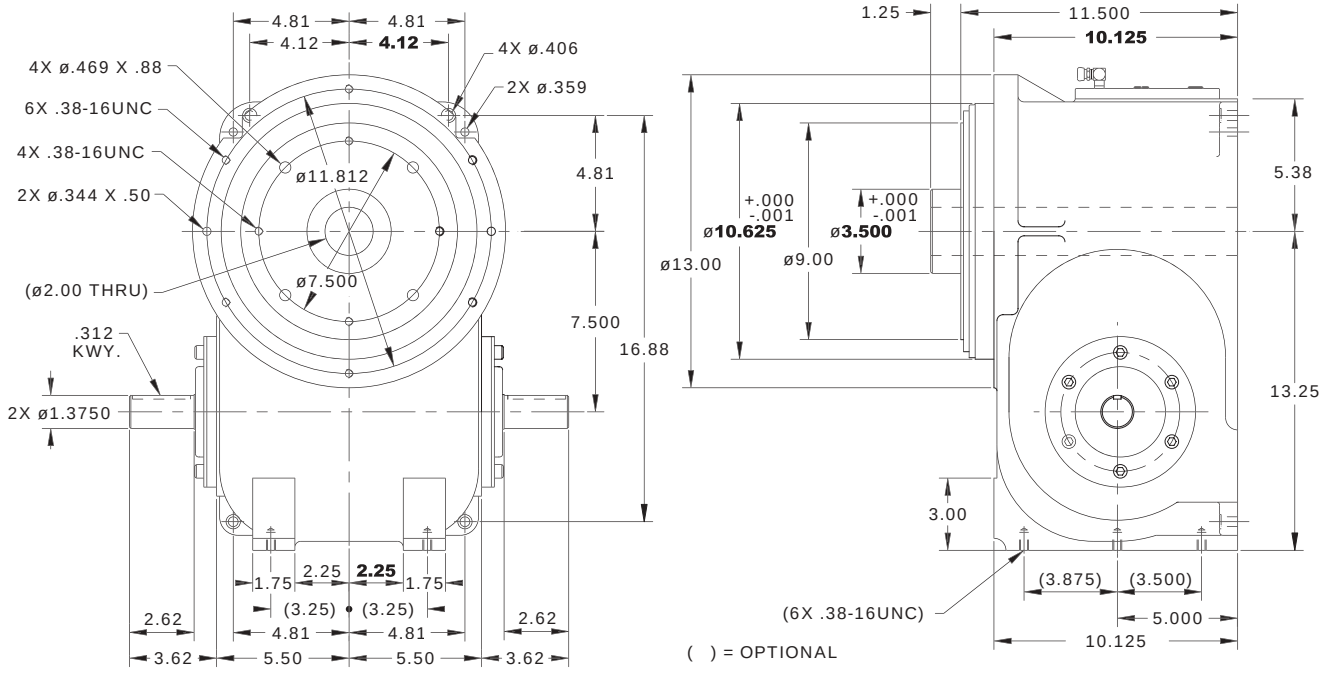

122 Indexer Capacities

Stops (S)	Index Period (β)	Motion	B_{10} Capacity at 50 RPM (in-lb)	Internal Inertia (lb-in²)	Model
2	300	ms	14,777	441	122-6/3-F200-300
3	270	msc.15	16,231	441	122-6/3-F200-270
	180	msc.30	22,489	441	122-6/2-F200-180
4	270	ms	21,722	587	122-8/2-F200-270
	180	msc.50	28,806	587	122-8/2-F200-180
6	270	ms	19,416	441	122-6-F200-270
	180	ms	21,422	441	122-6-F200-180
	120	ms	23,000	441	122-6-F200-120
8	270	ms	21,823	587	122-8-F200-270
	180	ms	24,247	587	122-8-F200-180
	120	ms	26,430	587	122-8-F200-120
12	270	ms	13,831	530	122-12-F150-270
	180	ms	15,474	529	122-12-F150-180
	120	ms	17,061	529	122-12-F150-120
16	270	ms	30,570	587	122-8X2-F200-135/135
	180	ms	34,118	587	122-8X2-F200-90/90
	120	ms	37,156	587	122-8X2-F200-60/60
24	270	ms	19,127	529	122-12X2-F150-135/135
	180	ms	21,515	529	122-12X2-F150-90/90
	120	ms	23,814	529	122-12X2-F150-60/60

Other Motions (stops and index periods) available. Contact your IMC sales representative for more information.

Technical Specifications

Output Load Capacity – loads carried during index

Radial	4,800 lbs
Thrust/Axial	3,000 lbs
Moment	21,600 in.-lbs

Accuracy	±30 arcsec / ±.004" at 24" Radius
Repeatability	±8 arcsec / ±.0009" at 24" Radius

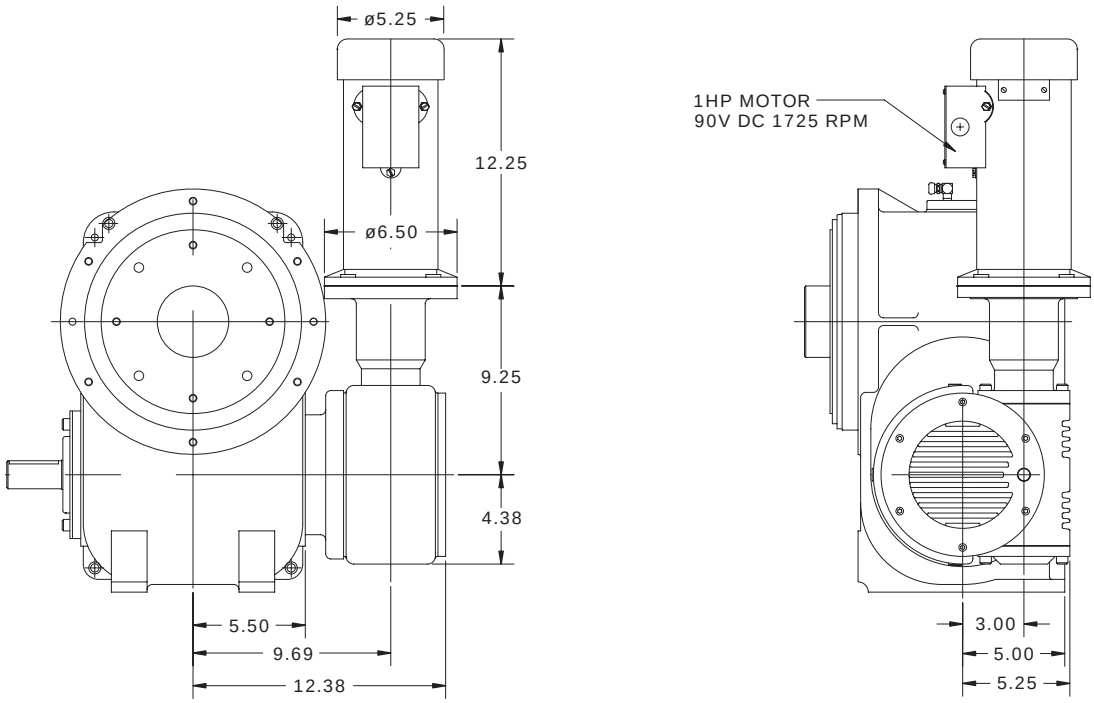

All dimensions are subject to change. For actual dimensions, please request the current drawing from IMC.

Standard Package

122 Intermittor Indexer with

- R3 Reducer (Ratios from 5:1 to 60:1)
  - Double Extended Worm Shaft (Input)
  - Motor Adapter and Coupling
- Double Extended Camshaft (Input Shaft)
- 1 hp DC Motor
- Varipak DC Motor Control (up to 30 cpm)
- Cycle Cam and Limit Switch Mounted to Camshaft
- Right Hand Cam

Optional Accessories

- 1 or 1.5 hp AC Drive Package with Inverter Duty Motor and Inverter Drive (up to 60 cpm)
- 1.5 hp DC motor
- R4 Reducer (Ratios from 5:1 to 60:1)
- Output Overload Clutch model RT8D or RT8DF
  - Available Adjustable Settings (in-lbs): 4000-9500, 6000-15,500
- Center Thru Hole (1.25 in. Diameter)
- Stationary Center Post
- Dual Cam and Limit Switch
- Electric Clutch-Brake
- Air Clutch-Brake
- Left Hand Cam
- Relief in Dwell for shot-pin applications
- Custom Dial Plate

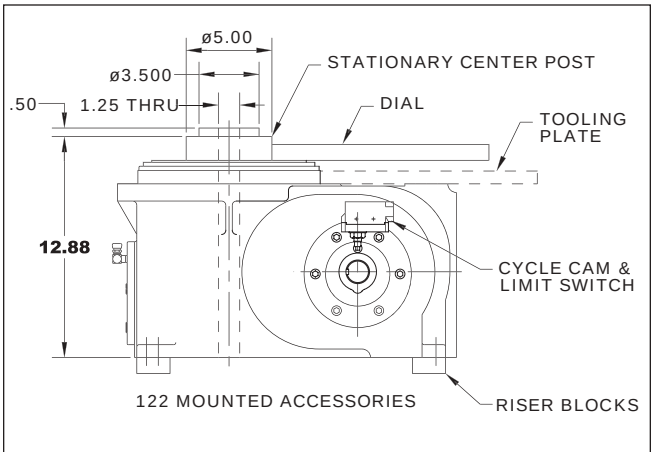

All dimensions are subject to change. For actual dimensions, please request the current drawing from IMC.

242 Intermittor

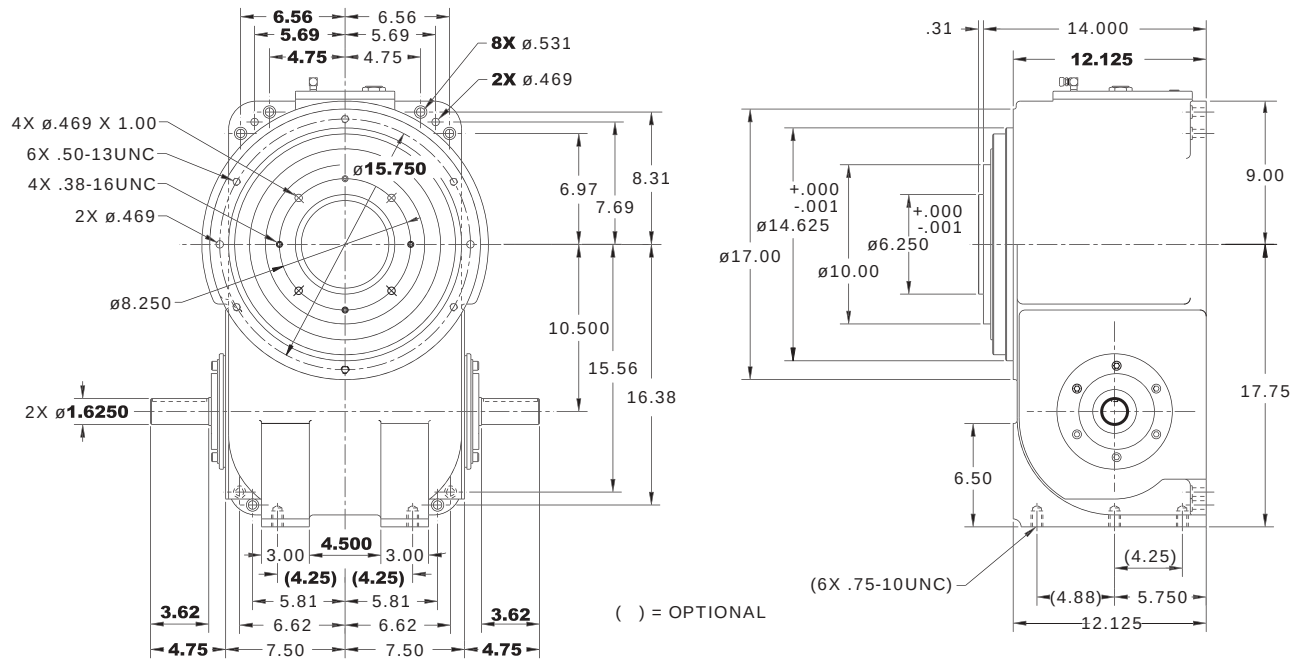

All dimensions are subject to change. For actual dimensions, please request the current drawing from IMC.

242 Indexer Capacities

Stops (S)	Index Period (β)	Motion	B_{10} Capacity at 50 RPM (in-lb)	Internal Inertia (lb-in²)	Model
2	330	msc.50	42,334	2,083	242-6/3-F250-330
3	300	msc.30	32,163	2,083	242-12/4-F200-300
4	300	ms	31,968	2,083	242-12/3-F200-300
	180	msc.15	27,356	1,882	242-12/3-F175-180
6	270	ms	37,947	2,083	242-12/2-F200-270
	180	msc.15	43,151	2,083	242-12/2-F200-180
	120	msc.30	35,799	1,882	242-12/2-F175-120
8	270	ms	31,997	1,951	242-16/2-F175-270
	180	msc.15	36,569	1,951	242-16/2-F175-180
	120	msc.15	27,741	1,801	242-16/2-F150-120
12	270	ms	37,347	2,083	242-12-F200-270
	180	ms	41,710	2,083	242-12-F200-180
	120	ms	45,893	2,083	242-12-F200-120
	90	ms	48,340	2,083	242-12-F200-90
16	270	ms	31,733	1,951	242-16-F175-270
	180	ms	35,510	1,951	242-16-F175-180
	120	ms	39,193	1,951	242-16-F175-120
24	270	ms	51,566	2,083	242-12X2-F200-135/135
	180	ms	57,376	2,083	242-12X2-F200-90/90
	120	ms	62,484	2,083	242-12X2-F200-60/60

Other Motions (stops and index periods) available. Contact your IMC sales representative for more information.

Technical Specifications

Output Load Capacity – loads carried during index

Radial	6,800 lbs
Thrust/Axial	4,700 lbs
Moment	40,600 in.-lbs

Accuracy	±39 arcsec / ±.0068" at 36" Radius
Repeatability	±10 arcsec / ±.0017" at 36" Radius

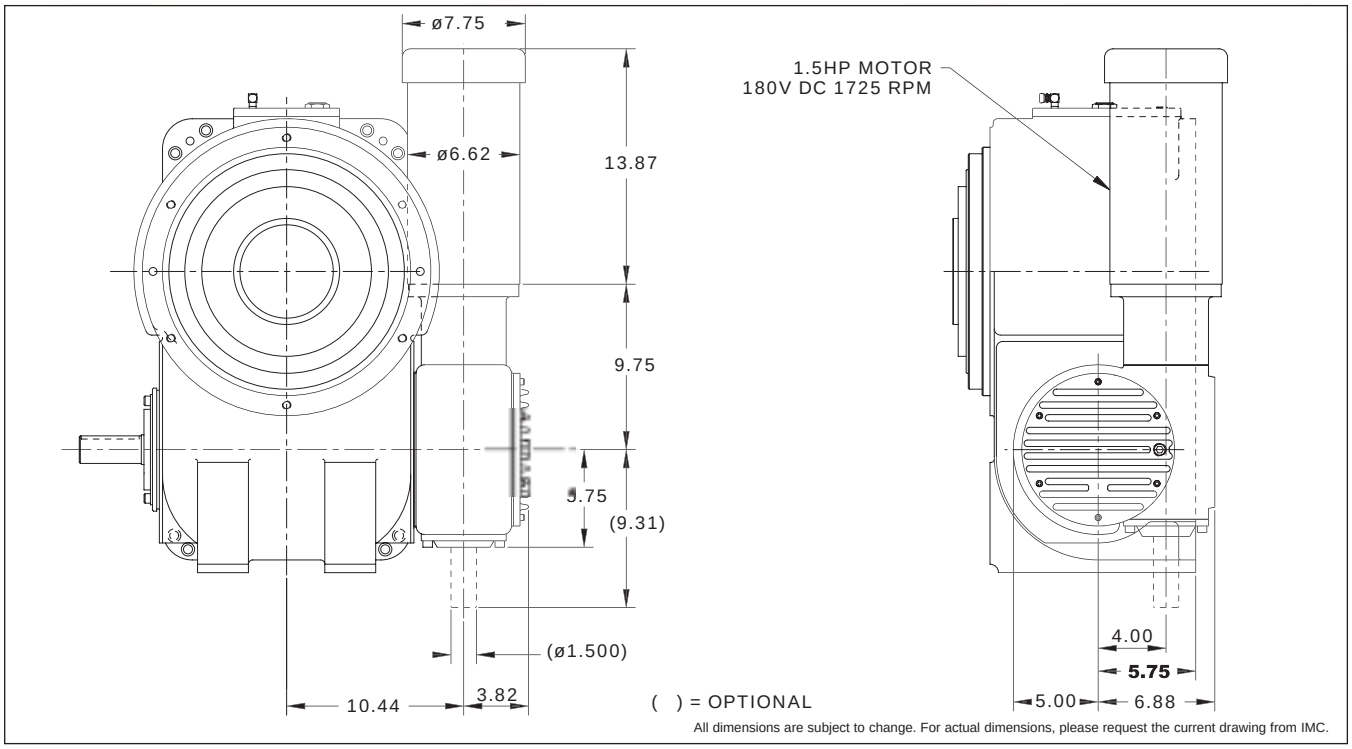

Standard Package

242 Intermittor Indexer with

- R4 Reducer (Ratios from 5:1 to 60:1)
  - Double Extended Worm Shaft (Input)
  - Motor Adapter and Coupling
- Double Extended Camshaft (Input Shaft)
- 1.5 hp DC Motor
- Varipak DC Motor Control (up to 30 cpm)
- Cycle Cam and Limit Switch Mounted to Camshaft
- Right Hand Cam

Optional Accessories

- 1.5 or 2 hp AC Drive Package with Inverter Duty Motor and Inverter Drive (up to 60 cpm)
- 2 hp DC motor
- R5 Reducer (Ratios from 5:1 to 60:1) with Motor Adapter and Coupling
- Center Thru Hole (2.00 in. Diameter)
- Stationary Center Post
- Dual Cam and Limit Switch
- Electric Clutch-Brake
- Air Clutch-Brake
- R4 or R5 FSC Input OLC
- Left Hand Cam
- Relief in Dwell for shot-pin applications
- Custom Dial Plate

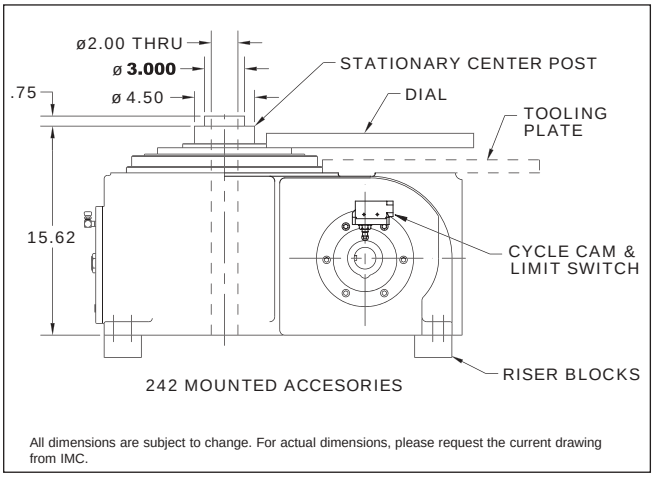

C

Indexer Ordering Procedure

1. Model
2. Input Shaft Configuration
   - Side 1
   - Side 2
   - Double Input – DI (Standard)
3. Cam Lead (Helix)
   - Right Hand (Standard)
   - Left Hand

NOTE: Input may rotate in either direction to achieve desired direction of output rotation.

4. Indexer Mounting Position: 1-6

Position of Shafts

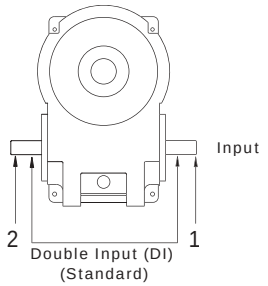

Cam Lead

Right Hand	Left Hand
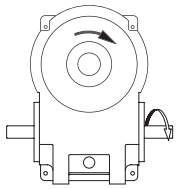	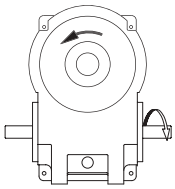

Indexer Mounting Position

1 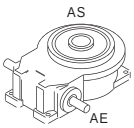	2 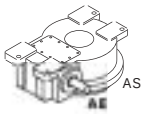
3 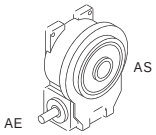	4 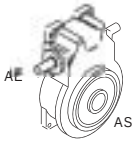
5 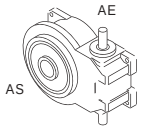	6 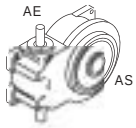
AE: Input Shaft	AS: Output Shaft

Reducer Ordering Procedure

1. Model
2. Ratio
   - 5:1, 10:1, 15:1, 20:1, 25:1, 30:1, 40:1, 50:1, 60:1
3. Motor Adapter
4. Reducer Input Shaft Extension
   - Single Input (SE) or Double Input (DE)
5. Mounting
   - Mounting Position A, B, C, or D
   - Mounted on Indexer Side 1 or Side 2
6. Input Shaft Orientation
   - Left or Right (See Diagram Below)

* **Consult IMC for availability of this mounting**

Reducer Mounting Position

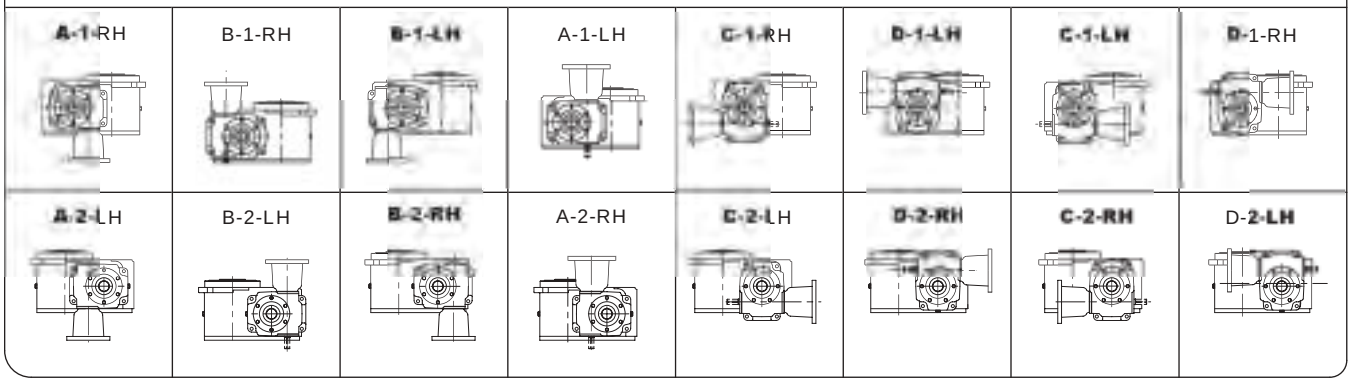

Roller Gear Index Drives

IMC
INDUSTRIAL MOTION CONTROL, LLC.
CAMCO FERGUSON

Features

IMC Roller Gear Index Drives are robust, versatile units suitable for a wide variety of applications. Roller Gear Index Drives include:

- Available with a Flange or Shaft Output.
- All six surfaces are machined for universal mounting.
- Optional Center Thru-Hole in Flange version facilitates passage of electrical wiring, pneumatic lines or mechanical linkages.
- Short camshaft motion periods, due to oversized cam design, are well suited for continuous running applications or for special motion requirements such as oscillating motions.

Roller Gear Index Drives are available in 14 models to meet a wide variety of speed, load and space requirements.

40RGD/40RGS

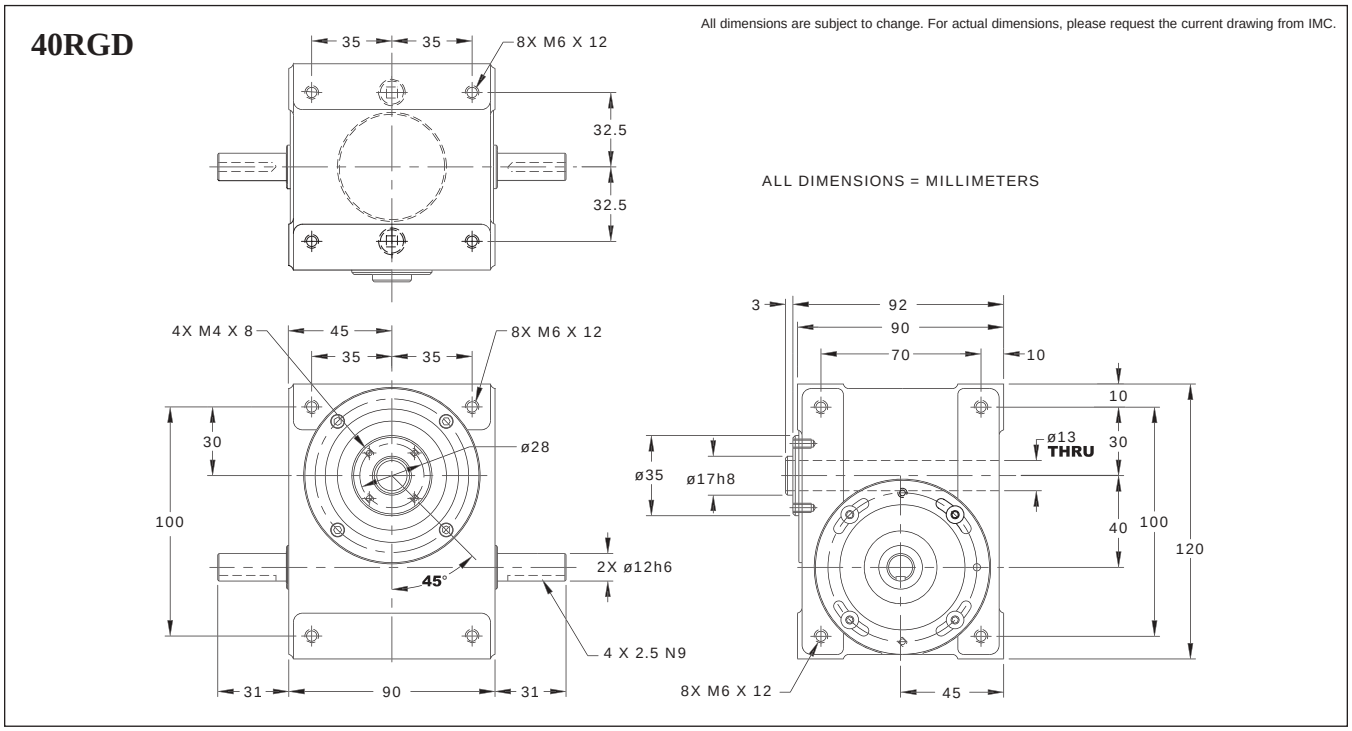

40RGD/RGS Indexer Capacities

Stops (S)	Index Period (β)	Motion	B_{10} Capacity at 50 RPM (in-lb)	RGD Internal Inertia (lb-in²)	RGS Internal Inertia (lb-in²)	Model*
2	270	ms	150	0.3	0.4	40RG(D/S)2H12-270
3	270	ms	187	0.3	0.4	40RG(D/S)3H12-270
4	270	ms	214	0.4	0.4	40RG(D/S)4H12-270
	180	ms	225	0.4	0.4	40RG(D/S)4H12-180
6	270	ms	193	0.3	0.4	40RG(D/S)6H12-270
	180	ms	208	0.3	0.4	40RG(D/S)6H12-180
	120	ms	220	0.3	0.4	40RG(D/S)6H12-120
	90	ms	216	0.3	0.4	40RG(D/S)6H12-90
8	270	ms	216	0.4	0.4	40RG(D/S)8H12-270
	180	ms	243	0.4	0.4	40RG(D/S)8H12-180
	120	ms	250	0.4	0.4	40RG(D/S)8H12-120
	90	ms	249	0.4	0.4	40RG(D/S)8H12-90
12	270	ms	124	0.3	0.4	40RG(D/S)12H9-270
	180	ms	140	0.3	0.4	40RG(D/S)12H9-180
	120	ms	139	0.3	0.4	40RG(D/S)12H9-120
	90	ms	139	0.3	0.4	40RG(D/S)12H9-90
16	270	ms	254	0.4	0.4	40RG(D/S)16H12-270 II
	120	ms	312	0.4	0.4	40RG(D/S)16H12-120 II
24	180	ms	173	0.3	0.4	40RG(D/S)24H9-180 II
	120	ms	326	0.3	0.4	40RG(D/S)24H12-120 III

* Specify "D" for Dial (Flange) Output or "S" for Shaft Output.

Other Motions (stops and index periods) available. Contact your IMC sales representative for more information.

Technical Specifications

Output Load Capacity – loads carried during index

	RGD	RGS
Radial	1107 lbs	374 lbs
Thrust/Axial	791 lbs	492 lbs
Moment	762 in-lbs	736 in-lbs

Accuracy ±90 arcsec / ±.0013" at 3" Radius

Repeatability ±45 arcsec / ±.0007" at 3" Radius

40RGS

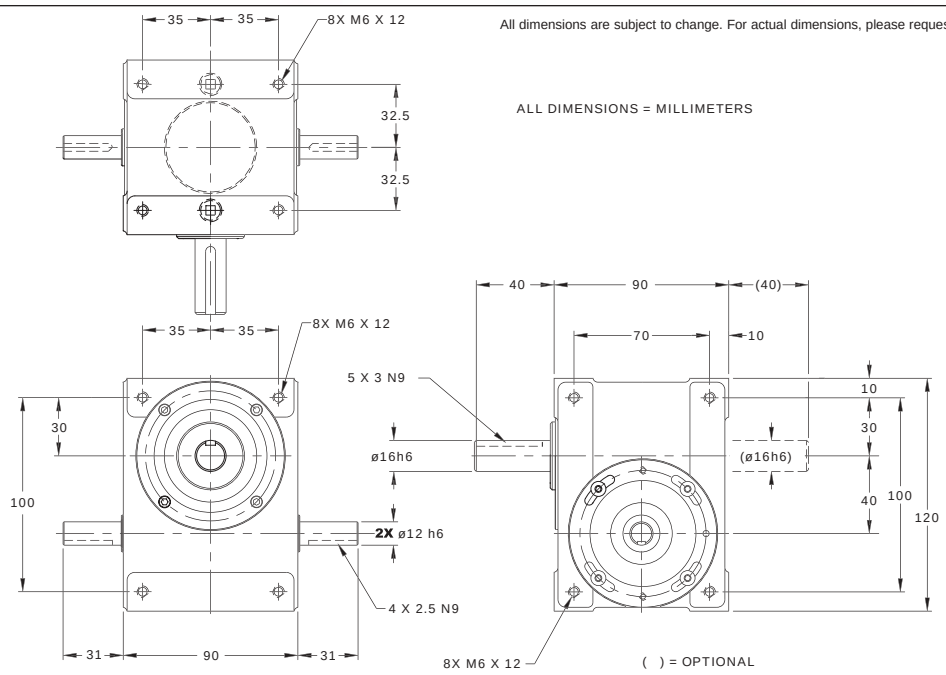

Standard Features

- Fully Metric
- Universal Mounting: mounting holes on any of 6 sides
- Center Through Hole (.50 in./13 mm Diameter) in RGD model.
- Right Hand Cam

Accessories and Options

- SW-030 Gear Reducer (ratios from 5:1 to 50:1) with
  - IEC63B14 Motor Adapter
  - 1/5 hp DC Motor and Varipak DC Motor Control (up to 30 cpm)
  - 1/6 hp AC Motor and Inverter Drive (up to 60 cpm)
- .06 hp DC Gear Motor Drive Package
  - Direct Drive or Belt Drive
  - Varipak DC Motor Control (up to 30 cpm)
- Output Overload Clutch Models: M40F, M40FC, M40S and M40C
  - Available Settings: 160, 210, 270 in-lb or 18, 24, 30 Nm
- Single or Dual Cycle Cam and Limit Switch
- Left Hand Cam
- Relief in Dwell for shot-pin applications

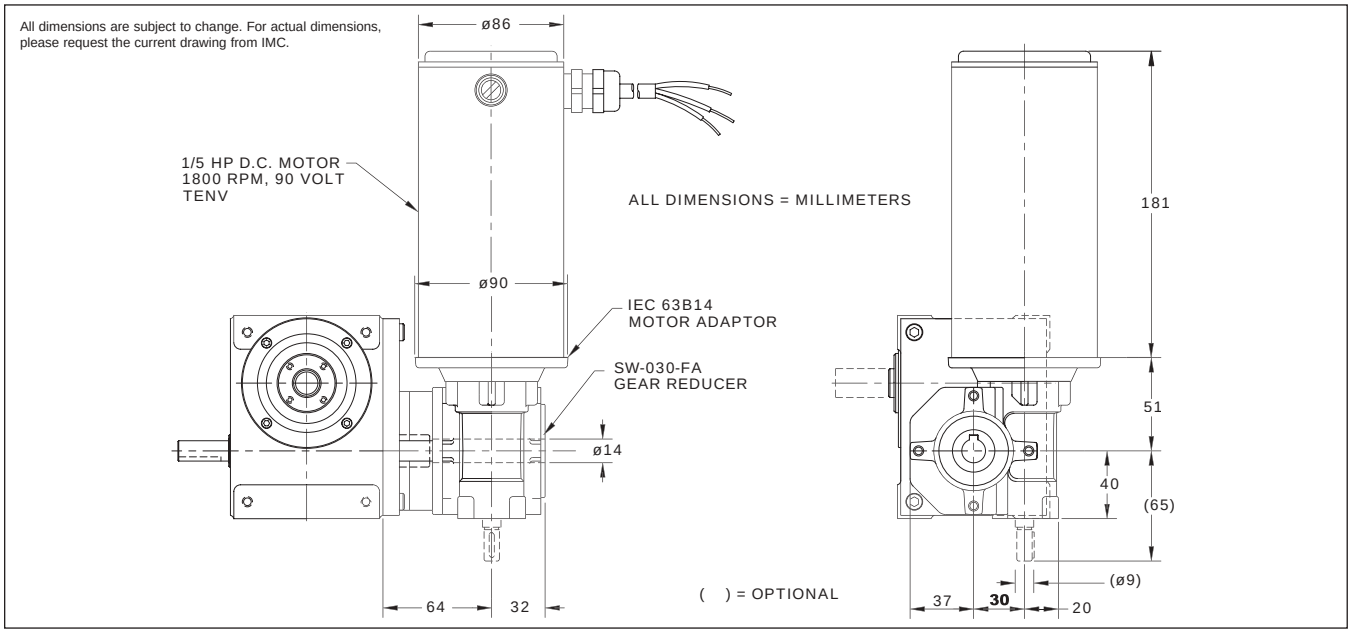

50RGD/50RGS

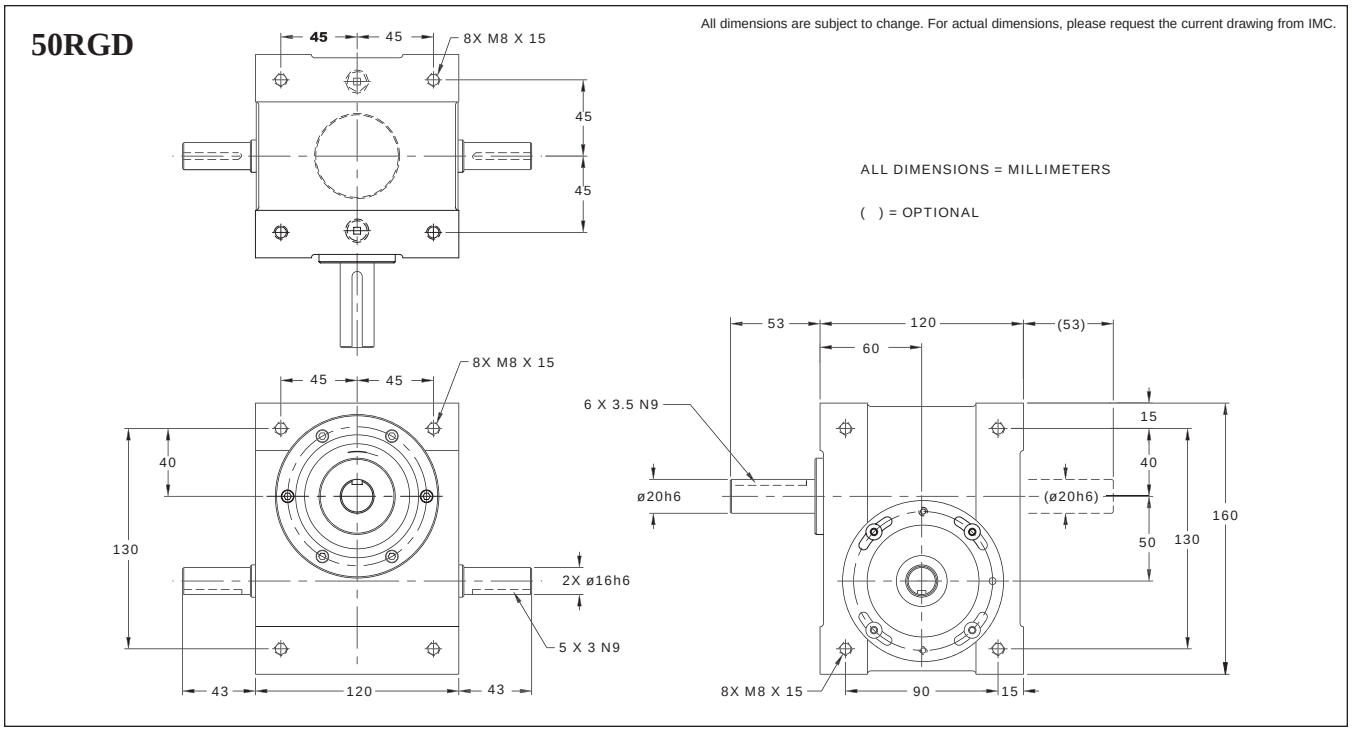

50RGD/RGS Indexer Capacities

Stops (S)	Index Period (β)	Motion	B_{10} Capacity at 50 RPM (in-lb)	RGD Internal Inertia (lb-in²)	RGS Internal Inertia (lb-in²)	Model*
2	270	msc.50	621	1.4	1.6	50RG(D/S)2H18-270
3	270	ms	287	1.3	1.5	50RG(D/S)3H14-270
	180	ms	300	1.3	1.5	50RG(D/S)3H14-180
4	270	ms	326	1.4	1.5	50RG(D/S)4H14-270
	180	ms	351	1.4	1.5	50RG(D/S)4H14-180
6	270	ms	606	1.4	1.6	50RG(D/S)6H18-270
	180	ms	671	1.4	1.6	50RG(D/S)6H18-180
	120	ms	719	1.4	1.6	50RG(D/S)6H18-120
	90	ms	734	1.4	1.6	50RG(D/S)6H18-90
8	270	ms	336	1.4	1.5	50RG(D/S)8H14-270
	180	ms	375	1.4	1.5	50RG(D/S)8H14-180
	120	ms	396	1.4	1.5	50RG(D/S)8H14-120
	90	ms	403	1.4	1.5	50RG(D/S)8H14-90
12	270	ms	275	1.4	1.5	50RG(D/S)12H12-270
	180	ms	310	1.4	1.5	50RG(D/S)12H12-180
	120	ms	322	1.4	1.5	50RG(D/S)12H12-120
	90	ms	329	1.4	1.5	50RG(D/S)12H12-90
16	180	ms	447	1.4	1.5	50RG(D/S)16H14-180 II
24	180	ms	374	1.4	1.5	50RG(D/S)24H12-180 II
	120	ms	409	1.4	1.5	50RG(D/S)24H12-120 II

* Specify "D" for Dial (Flange) Output or "S" for Shaft Output.

Other Motions (stops and index periods) available. Contact your IMC sales representative for more information.

Technical Specifications

Output Load Capacity – loads carried during index

	RGD	RGS
Radial	1775 lbs	689 lbs
Thrust/Axial	925 lbs	545 lbs
Moment	1572 in-lbs	1438 in-lbs

Accuracy	±73 arcsec / ±.0011" at 3" Radius
Repeatability	±37 arcsec / ±.0007" at 3" Radius

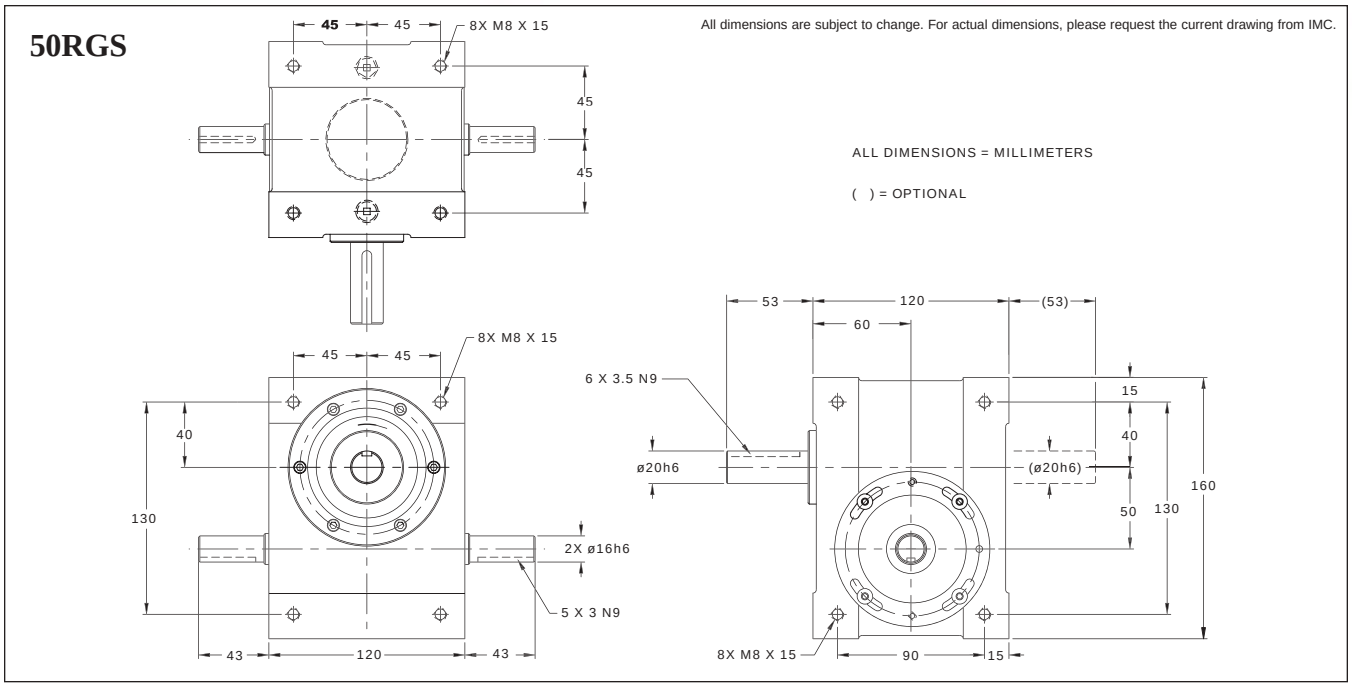

Standard Features

- Fully Metric
- Universal Mounting: mounting holes on any of 6 sides
- Center Through Hole (.59 in. / 15 mm Diameter) in RGD model.
- Right Hand Cam

Accessories and Options

- SW-040 Gear Reducer (ratios from 5:1 to 40:1) with
  - IEC63B14 Motor Adapter
  - 1/4 hp AC Motor and Inverter Drive (up to 60 cpm)
  - 1/5 hp DC Motor and Varipak DC Motor Control (up to 30 cpm)
- .125 hp DC Gear Motor Drive Package
  - Direct Drive or Belt Drive
  - Varipak DC Motor Control (up to 30 cpm)
- Output Overload Clutch Models: M50F, M50FC, M50S and M50C
  - Available Settings: 270, 320, 390 in-lb or 30, 35, 40 Nm
- Single or Dual Cycle Cam and Limit Switch
- Left Hand Cam
- Relief in Dwell for shot-pin applications

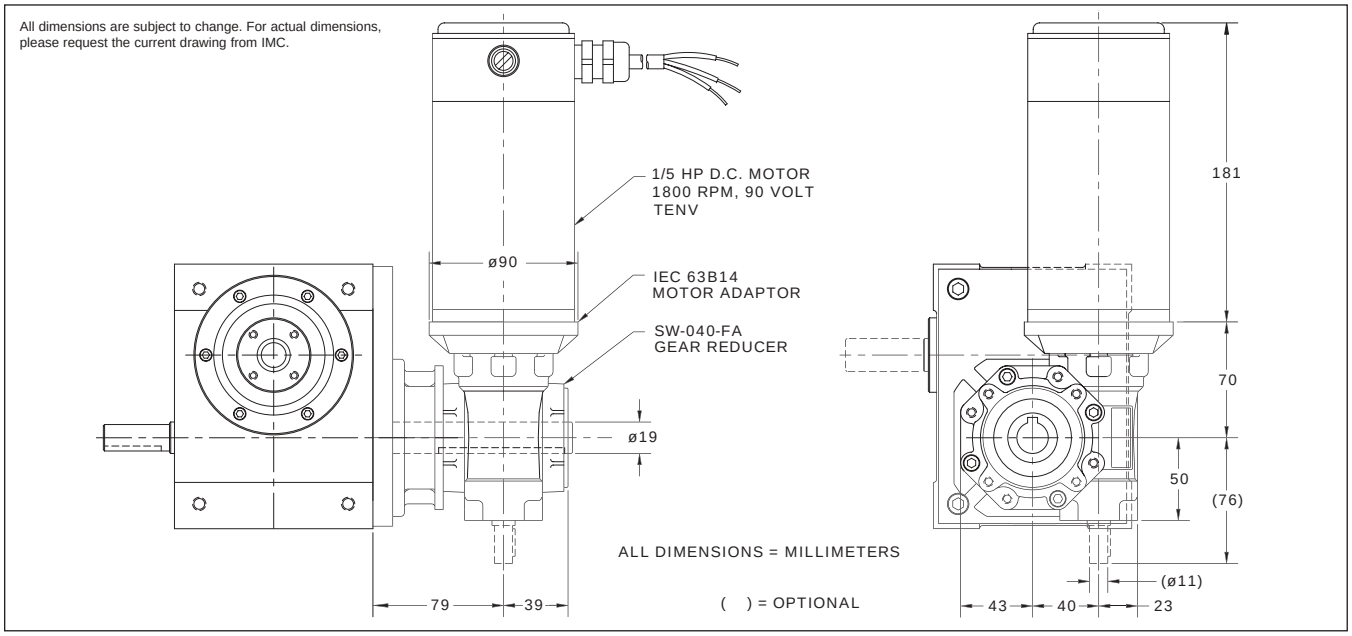

70RGD/70RGS

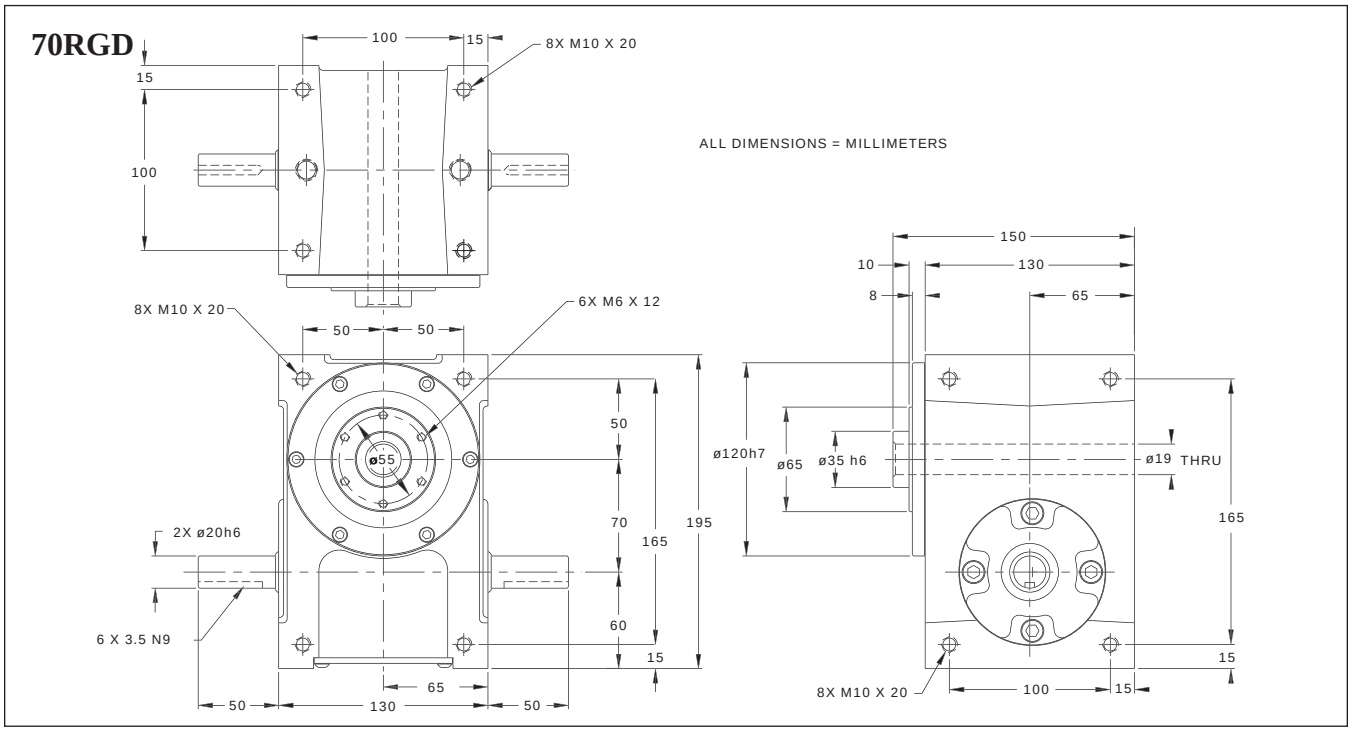

70RGD/RGS Indexer Capacities

Stops (S)	Index Period (β)	Motion	B_{10} Capacity at 50 RPM (in-lb)	RGD Internal Inertia (lb-in²)	RGS Internal Inertia (lb-in²)	Model*
2	270	ms	585	7	8	70RG(D/S)2H20-270
	180	ms	562	7	8	70RG(D/S)2H18-180
3	270	ms	720	7	8	70RG(D/S)3H20-270
	180	ms	753	7	8	70RG(D/S)3H20-180
4	270	ms	821	9	10	70RG(D/S)4H20-270
	180	msc.15	942	9	10	70RG(D/S)4H20-180
	120	msc.33	1107	10	10	70RG(D/S)4H18-120
6	270	ms	1406	9	10	70RG(D/S)6H24-270
	180	ms	1583	9	10	70RG(D/S)6H24-180
	120	ms	1768	9	10	70RG(D/S)6H24-120
	90	msc.33	2110	9	10	70RG(D/S)6H24-90
8	270	ms	853	9	10	70RG(D/S)8H20-270
	180	ms	949	9	10	70RG(D/S)8H20-180
	120	ms	1027	9	10	70RG(D/S)8H20-120
	90	ms	1063	9	10	70RG(D/S)8H20-90
12	270	ms	470	10	10	70RG(D/S)12H14-270
	180	ms	528	10	10	70RG(D/S)12H14-180
	120	ms	564	10	10	70RG(D/S)12H14-120
	90	ms	584	10	10	70RG(D/S)12H14-90
24	180	ms	635	10	10	70RG(D/S)24H14-180 II

* Specify "D" for Dial (Flange) Output or "S" for Shaft Output.

Other Motions (stops and index periods) available. Contact your IMC sales representative for more information.

Technical Specifications

Output Load Capacity – loads carried during index

	RGD	RGS
Radial	2833 lbs	1019 lbs
Thrust/Axial	2224 lbs	802 lbs
Moment	3626 in-lbs	2808 in-lbs

Accuracy	±50 arcsec / ±.0008" at 3" Radius
Repeatability	±25 arcsec / ±.0003" at 3" Radius

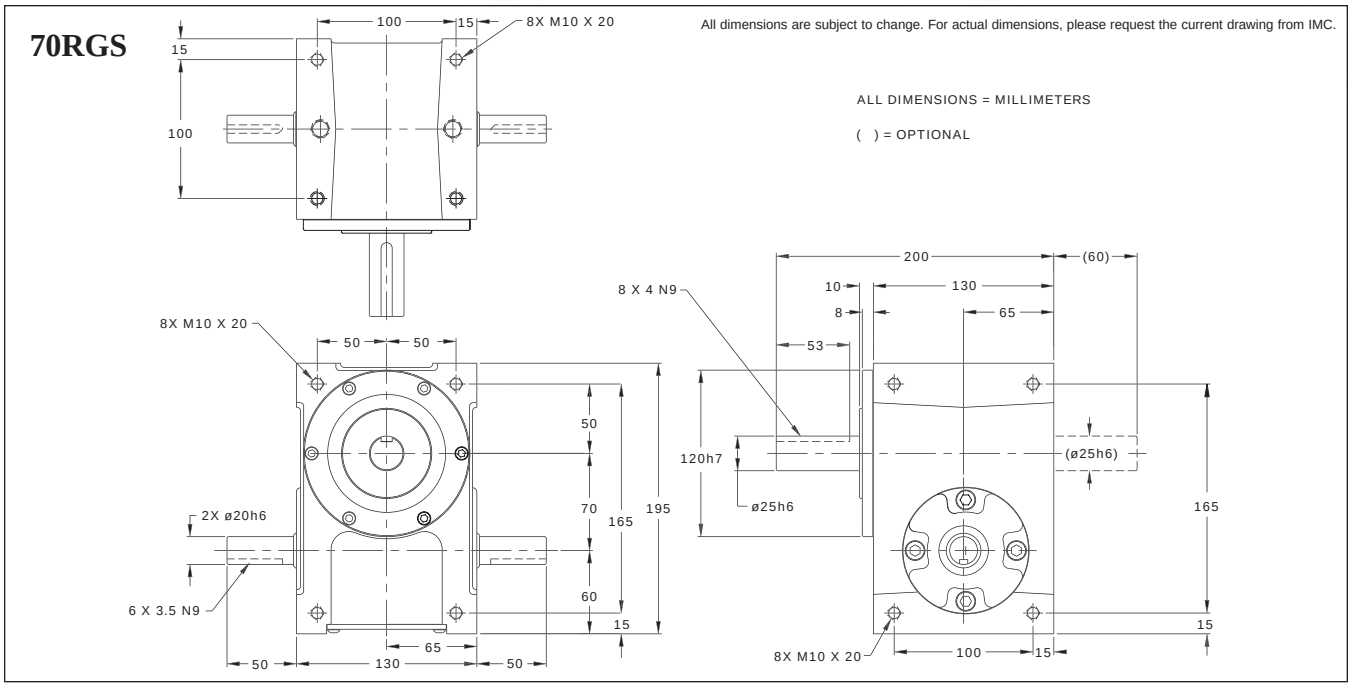

Standard Features

- Fully Metric
- Universal Mounting: mounting holes on any of 6 sides
- Center Through Hole (.75 in / 19 mm Diameter) in RGD version.
- Right Hand Cam

Accessories and Options

- R180 Reducer (Ratios from 5:1 to 60:1)
- 1/3 hp DC Motor with Varipak DC Motor Control (up to 30 cpm)
- 1/3 hp AC Drive Package with Inverter Duty Motor and Inverter Drive (up to 60 cpm)
- Single or Dual Cycle Cam and Limit Switch
- Output Overload Clutch Models: M70F, M70FC, M70S and M70C
  - Available Settings: 400, 600, 700, 850, 1000 in-lb or 45, 7, 80, 95, 115 Nm
- Left Hand Cam
- Relief in Dwell for shot-pin applications

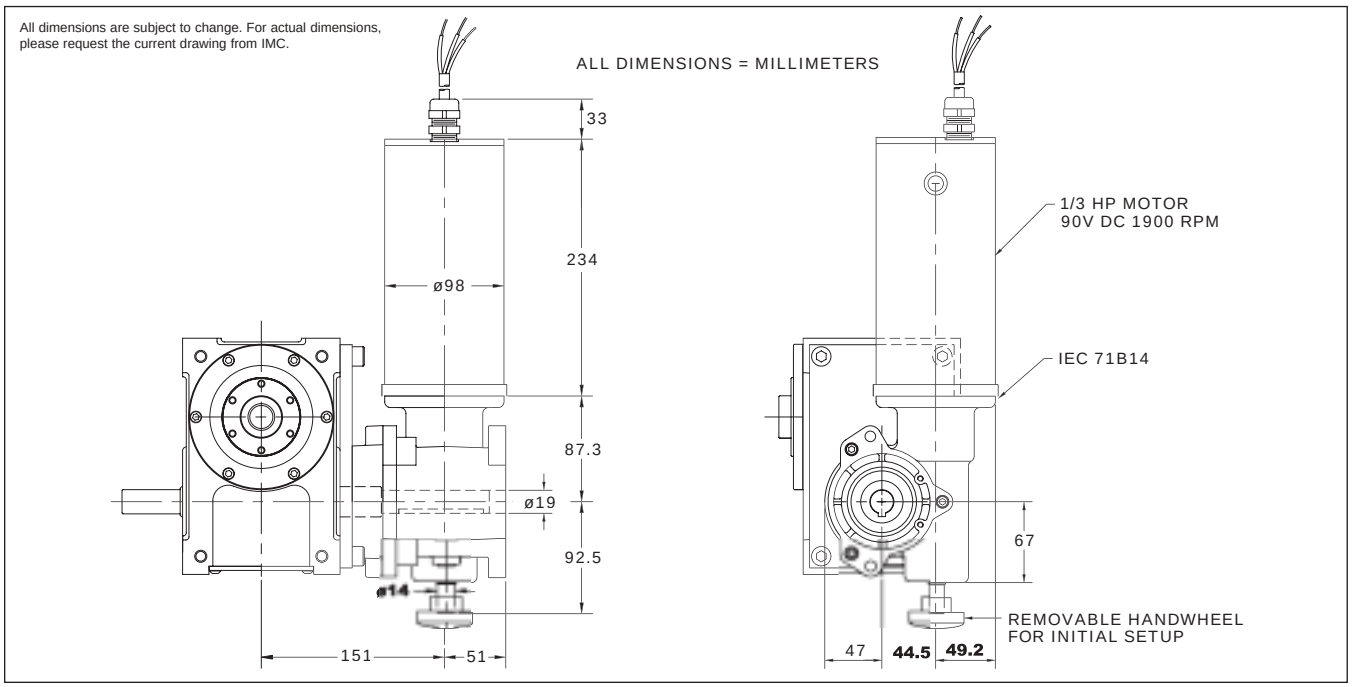

D

80RGD/80RGS

80RGD

All dimensions are subject to change. For actual dimensions, please request the current drawing from IMC.

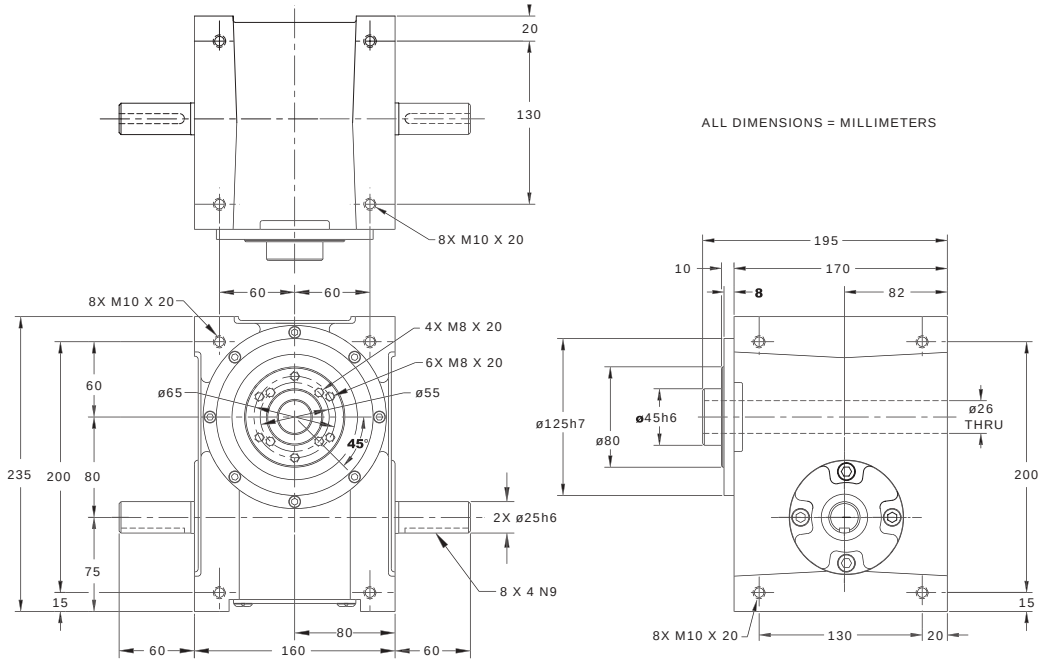

80RGD/RGS Indexer Capacities

Stops (S)	Index Period (β)	Motion	B_{10} Capacity at 50 RPM (in-lb)	RGD Internal Inertia (lb-in²)	RGS Internal Inertia (lb-in²)	Model*
2	330	ms	1144	16	17	80RG(D/S)2H24-330
	300	ms	1153	16	17	80RG(D/S)2H24-300
	270	msc.33	1388	16	17	80RG(D/S)2H24-270
3	270	ms	1422	16	17	80RG(D/S)3H24-270
	180	ms	1513	16	17	80RG(D/S)3H24-180
4	270	ms	1663	21	21	80RG(D/S)4H24-270
	180	msc.33	2377	21	21	80RG(D/S)4H24-180
6	270	ms	1524	18	19	80RG(D/S)6H28-270
	180	ms	1714	18	19	80RG(D/S)6H28-180
	120	ms	1823	18	19	80RG(D/S)6H28-120
	90	msc.50	2323	18	19	80RG(D/S)6H28-90
8	270	ms	1733	21	21	80RG(D/S)8H24-270
	180	ms	2072	21	21	80RG(D/S)8H24-180
	120	ms	2388	21	21	80RG(D/S)8H24-120
	90	msc.33	2937	21	21	80RG(D/S)8H24-90
12	270	ms	1011	20	20	80RG(D/S)12H18-270
	180	ms	1135	20	20	80RG(D/S)12H18-180
	120	msc.33	1420	20	20	80RG(D/S)12H18-120
	90	msc.60	1725	20	20	80RG(D/S)12H18-90

* Specify "D" for Dial (Flange) Output or "S" for Shaft Output.

Other Motions (stops and index periods) available. Contact your IMC sales representative for more information.

Technical Specifications

Output Load Capacity – loads carried during index

	RGD	RGS
Radial	4790 lbs	2162 lbs
Thrust/Axial	3470 lbs	1246 lbs
Moment	7544 in-lbs	4853 in-lbs

Accuracy	±45 arcsec / ±.0007" at 3" Radius
Repeatability	±24 arcsec / ±.0004" at 3" Radius

80RGS

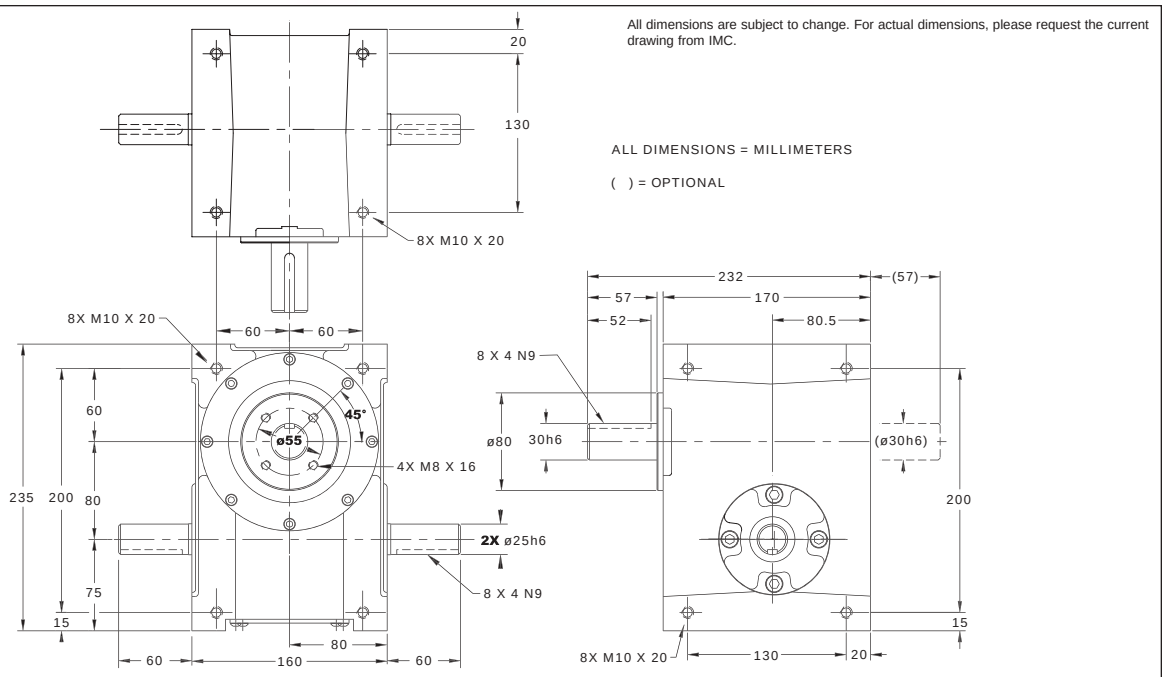

Standard Features

- Fully Metric
- Universal Mounting: mounting holes on any of 6 sides
- Center Through Hole (1.02 in. / 26 mm) in RGD version.
- Right Hand Cam

Accessories and Options

- R180 Reducer (Ratios from 5:1 to 60:1)
- 1/3 hp DC Motor with Varipak DC Motor Control (up to 30 cpm)
- 1/3 hp AC Drive Package with Inverter Duty Motor and Inverter Drive (up to 60 cpm)
- Single or Dual Cycle Cam and Limit Switch
- Output Overload Clutch Models: M80F, M80FC, M80S and M80C
  - Available Settings: 400, 600, 700, 850, 1000, 1300 in-lb or 45, 7, 80, 95, 115, 145 Nm
- Left Hand Cam
- Relief in Dwell for shot-pin applications

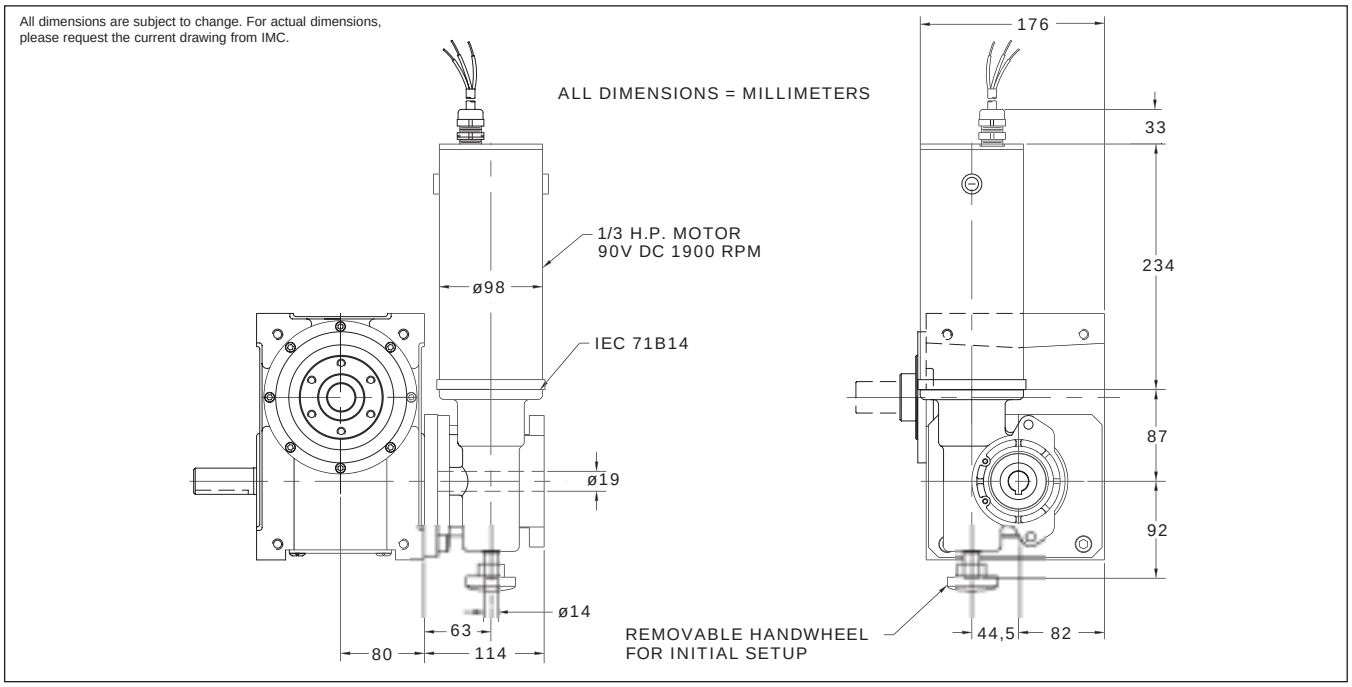

110RGD/110RGS

110RGD

All dimensions are subject to change. For actual dimensions, please request the current drawing from IMC.

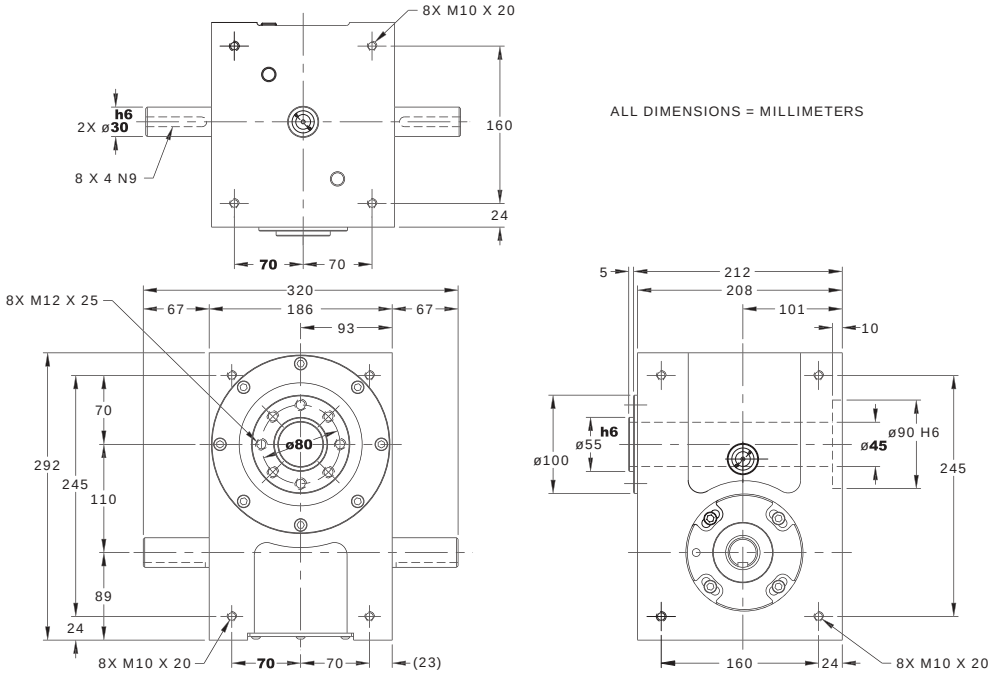

110RGD/RGS Indexer Capacities

Stops (S)	Index Period (β)	Motion	B_{10} Capacity at 50 RPM (in-lb)	RGD Internal Inertia (lb-in²)	RGS Internal Inertia (lb-in²)	Model*
2	300	msc.33	5271	51	56	110RG(D/S)2H40-300
	270	msc.50	6126	51	56	110RG(D/S)2H40-270
3	270	ms	5609	51	56	110RG(D/S)3H40-270
	180	msc.50	7829	51	56	110RG(D/S)3H40-180
4	270	ms	3282	48	55	110RG(D/S)4H32-270
	180	msc.33	4147	48	55	110RG(D/S)4H32-180
6	270	ms	7378	52	70	110RG(D/S)6H48-270
	180	msc.33	9342	52	70	110RG(D/S)6H48-180
	120	msc.33	8127	51	56	110RG(D/S)6H40-120
8	270	ms	3440	48	55	110RG(D/S)8H32-270
	180	ms	3823	48	55	110RG(D/S)8H32-180
	120	ms	4149	48	55	110RG(D/S)8H32-120
12	270	ms	2815	47	55	110RG(D/S)12H28-270
	180	ms	3157	47	55	110RG(D/S)12H28-180
	120	ms	3367	45	51	110RG(D/S)12H24-120
16	270	ms	1610	45	53	110RG(D/S)16H20-270
	180	ms	1807	45	53	110RG(D/S)16H20-180
	120	ms	1992	45	53	110RG(D/S)16H20-120
24	270	ms	3650	45	51	110RG(D/S)24H24-270 II
	180	ms	4134	45	51	110RG(D/S)24H24-180 II

* Specify "D" for Dial (Flange) Output or "S" for Shaft Output.

Other Motions (stops and index periods) available. Contact your IMC sales representative for more information.

Technical Specifications

Output Load Capacity – loads carried during index

	RGD	RGS
Radial	5613 lbs	3375 lbs
Thrust/Axial	4411 lbs	2053 lbs
Moment	11050 in-lbs	7706 in-lbs

Accuracy	±30 arcsec / ±.0009" at 6" Radius
Repeatability	±15 arcsec / ±.0004" at 6" Radius

110RGS

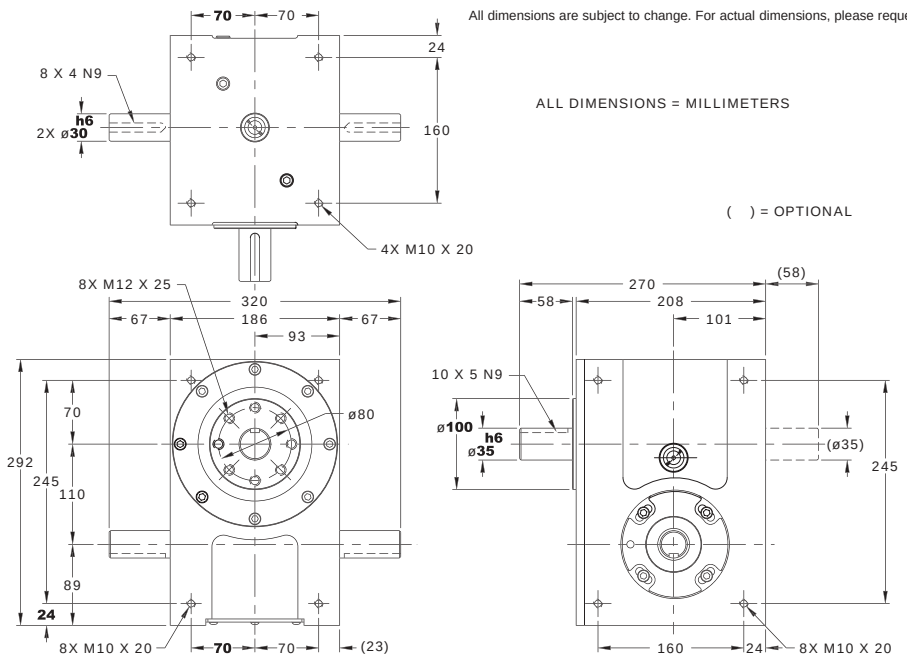

Standard Features

- Fully Metric
- Universal Mounting: mounting holes on any of 6 sides
- Center Through Hole (1.77 in. / 45 mm Diameter) in RGD version.
- Right Hand Cam

Accessories and Options

- KH37 Reducer
  - Ratios from 5.36:1 to 106.38:1 (consult factory for exact ratios available)
  - 1 hp AC Drive Package with Inverter Duty Motor and Inverter Drive (up to 60 cpm)
- Single or Dual Cycle Cam and Limit Switch
- Left Hand Cam
- Relief in Dwell for shot-pin applications

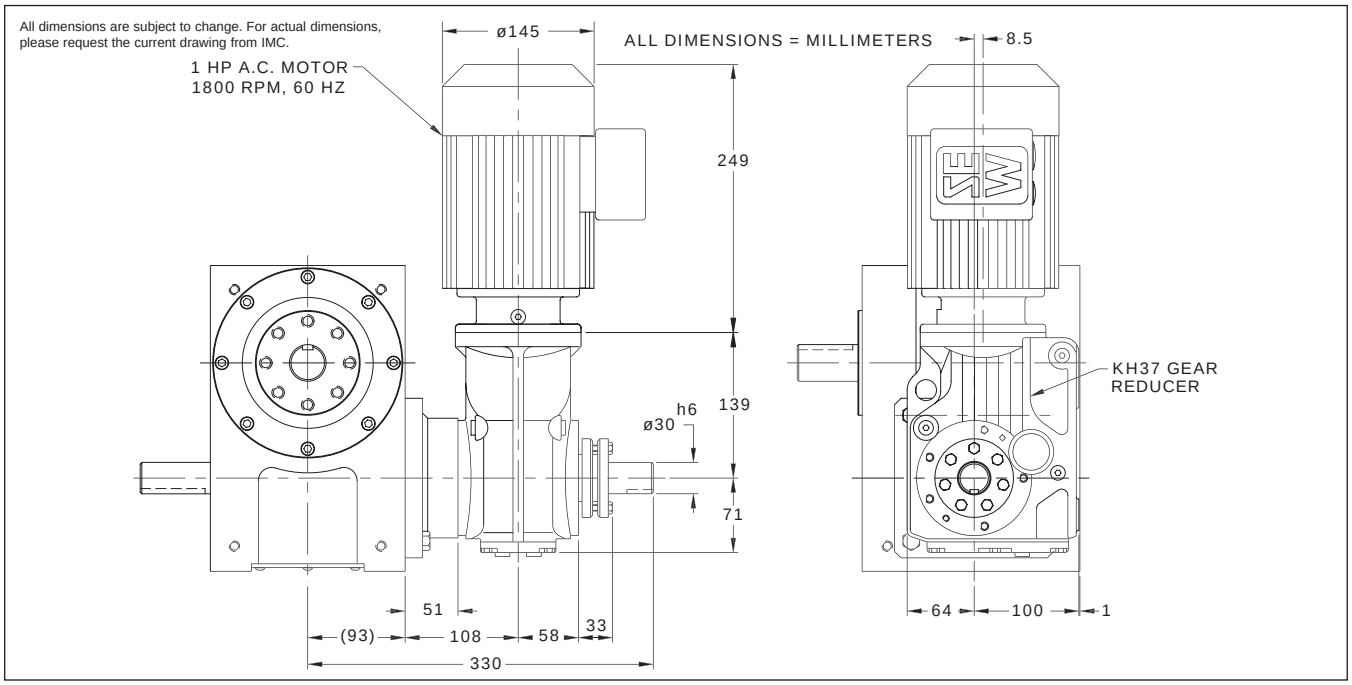

140RGD/140RGS

140RGD

All dimensions are subject to change. For actual dimensions, please request the current drawing from IMC.

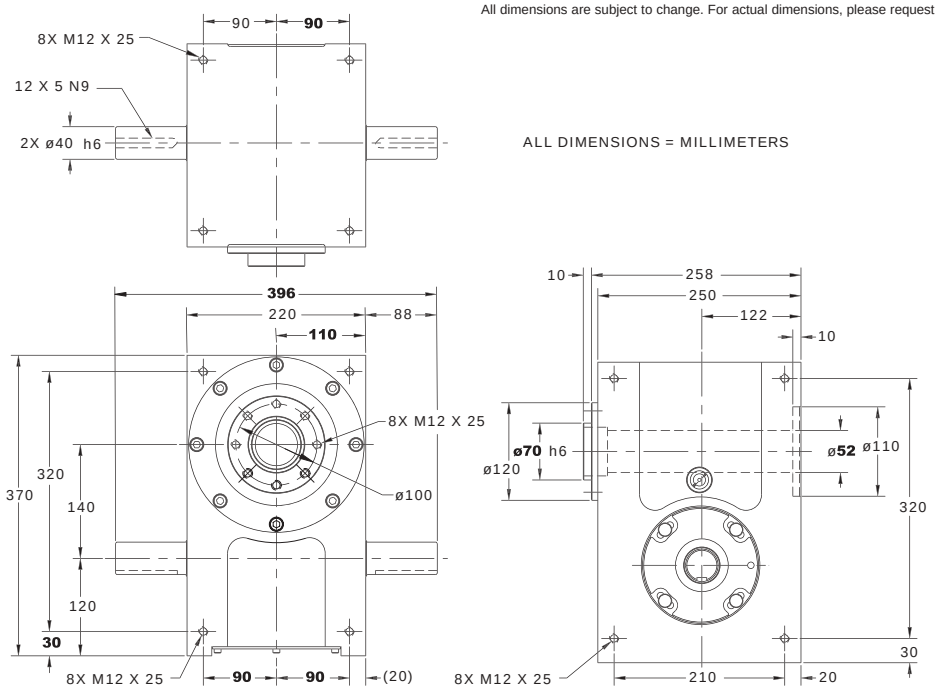

140RGD/RGS Indexer Capacities

Stops (S)	Index Period (β)	Motion	B_{10} Capacity at 50 RPM (in-lb)	RGD Internal Inertia (lb-in²)	RGS Internal Inertia (lb-in²)	Model*
2	300	msc.33	7979	163	163	140RG(D/S)2H48-300
3	270	ms	8434	163	163	140RG(D/S)3H48-270
	180	msc.50	11989	163	163	140RG(D/S)3H48-180
4	270	ms	7577	153	153	140RG(D/S)4H40-270
	180	msc.33	10151	153	153	140RG(D/S)4H40-180
6	270	ms	8924	163	163	140RG(D/S)6H48-270
	180	ms	10156	163	163	140RG(D/S)6H48-180
	120	ms	10906	163	163	140RG(D/S)6H48-120
8	270	ms	7929	153	153	140RG(D/S)8H40-270
	180	ms	9175	153	153	140RG(D/S)8H40-180
	120	ms	10184	153	153	140RG(D/S)8H40-120
12	270	ms	4516	147	147	140RG(D/S)12H32-270
	180	ms	5067	147	147	140RG(D/S)12H32-180
	120	ms	5834	147	147	140RG(D/S)12H32-120
16	270	ms	3617	154	154	140RG(D/S)16H24-270
	180	ms	4169	154	154	140RG(D/S)16H24-180
	120	ms	4793	154	154	140RG(D/S)16H24-120
24	270	ms	6185	147	147	140RG(D/S)24H32-270 II
	180	ms	7011	147	147	140RG(D/S)24H32-180 II
	120	ms	7793	147	147	140RG(D/S)24H32-120 II

* Specify "D" for Dial (Flange) Output or "S" for Shaft Output.

Other Motions (stops and index periods) available. Contact your IMC sales representative for more information.

Technical Specifications

Output Load Capacity – loads carried during index

	RGD	RGS
Radial	8447 lbs	4727 lbs
Thrust/Axial	6629 lbs	2342 lbs
Moment	19953 in-lbs	16378 in-lbs

Accuracy	±25 arcsec / ±.0007" at 6" Radius
Repeatability	±12 arcsec / ±.0004" at 6" Radius

140RGS

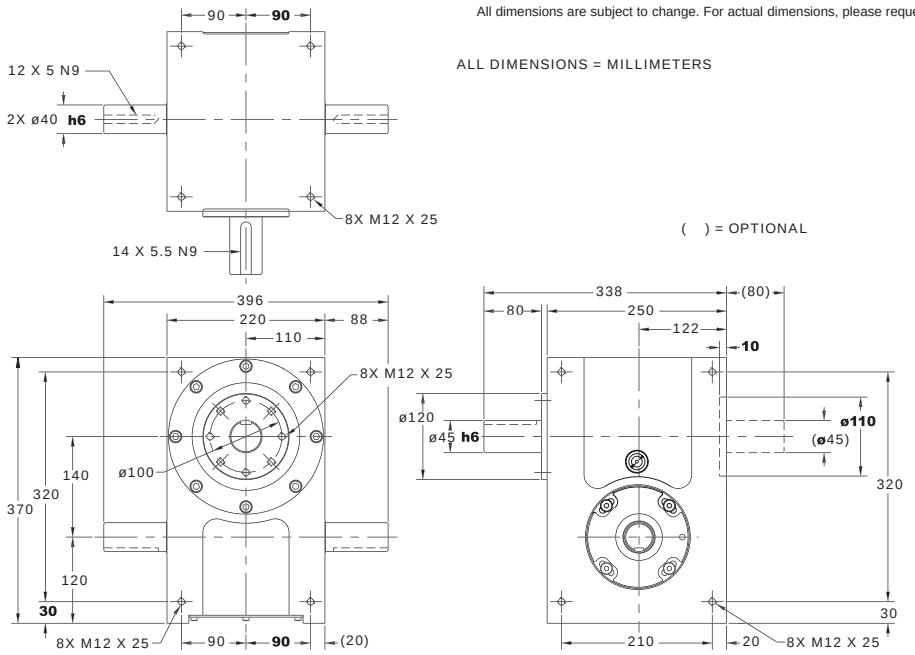

Standard Features

- Fully Metric
- Universal Mounting: mounting holes on any of 6 sides
- Center Through Hole (2.05 in. / 52 mm Diameter) in RGD version.
- Right Hand Cam

Accessories and Options

- KH47 Reducer
  - Ratios from 6.58:1 to 131.87:1 (consult factory for exact ratios available)
  - 1 or 1.5 hp AC Drive Package with Inverter Duty Motor and Inverter Drive (up to 60 cpm)
- Single or Dual Cycle Cam and Limit Switch
- Left Hand Cam
- Relief in Dwell for shot-pin applications

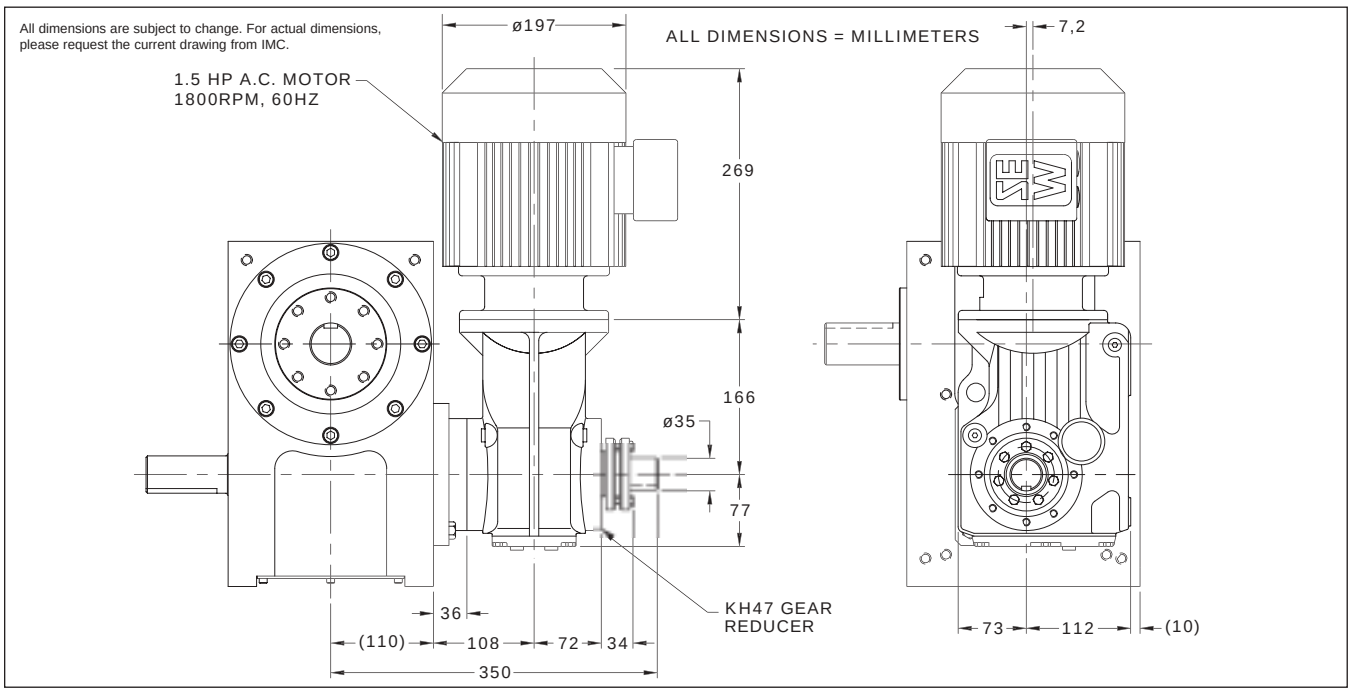

350RGD/350RGS

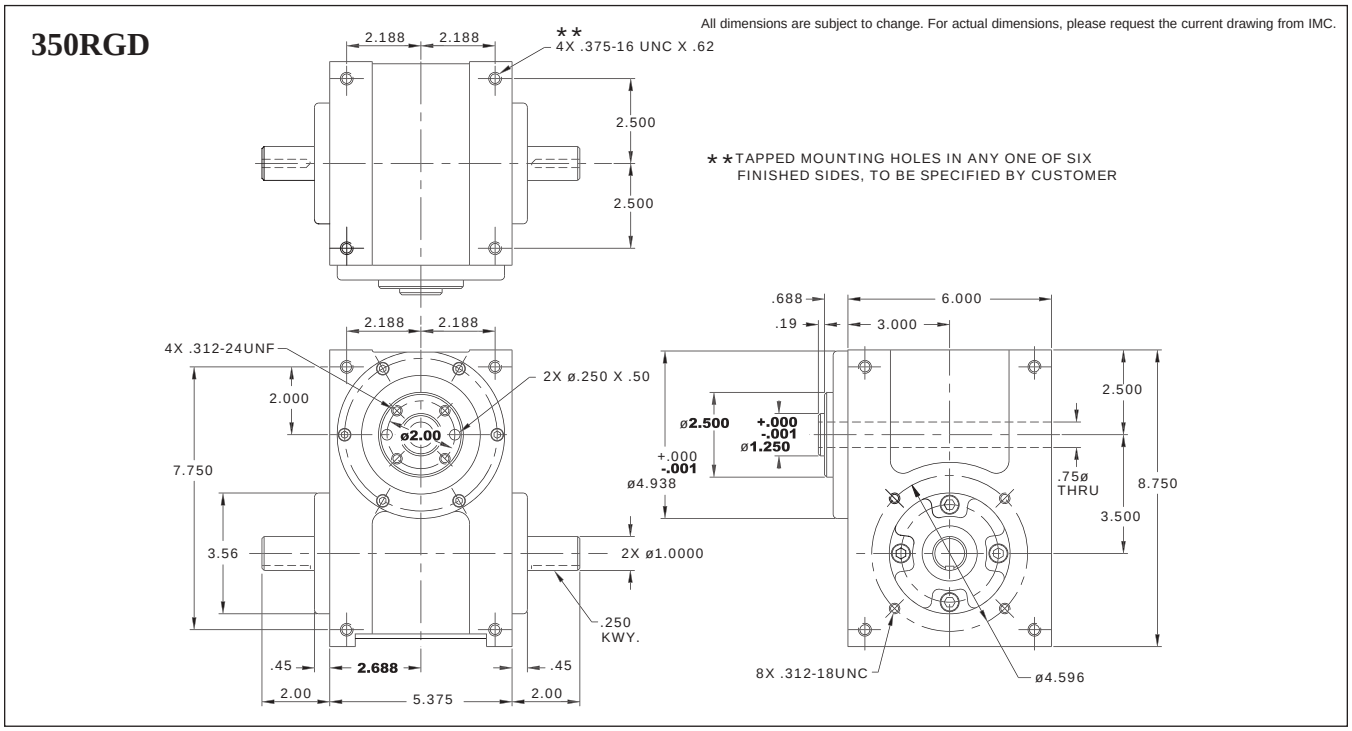

350RGD/RGS Indexer Capacities

Stops (S)	Index Period (β)	Motion	B_{10} Capacity at 50 RPM (in-lb)	RGD Internal Inertia (lb-in²)	RGS Internal Inertia (lb-in²)	Model*
1	330	msc.50	1774	7.7	9.7	350RG(D/S)1H24-330
2	270	ms	1244	7.7	9.7	350RG(D/S)2H24-270
	180	msc.67	2047	7.7	9.7	350RG(D/S)2H24-180
3	270	ms	1530	7.7	9.7	350RG(D/S)3H24-270
	180	ms	1601	7.7	9.7	350RG(D/S)3H24-180
4	300	ms	1701	8.1	10.1	350RG(D/S)4H24-300
	270	ms	1767	8.1	10.1	350RG(D/S)4H24-270
	180	ms	2001	8.1	10.1	350RG(D/S)4H24-180
6	270	ms	1615	7.7	9.7	350RG(D/S)6H24-270
	180	ms	1791	7.7	9.7	350RG(D/S)6H24-180
	120	ms	1972	7.7	9.7	350RG(D/S)6H24-120
	90	ms	2063	7.7	9.7	350RG(D/S)6H24-90
8	270	ms	1840	8.1	10.1	350RG(D/S)8H24-270
	180	ms	2184	8.1	10.1	350RG(D/S)8H24-180
	120	ms	2532	8.1	10.1	350RG(D/S)8H24-120
	90	ms	2716	8.1	10.1	350RG(D/S)8H24-90
12	270	ms	1132	7.9	9.9	350RG(D/S)12H20-270
	180	ms	1269	7.9	9.9	350RG(D/S)12H20-180
	120	ms	1396	7.9	9.9	350RG(D/S)12H20-120
	90	ms	1476	7.9	9.9	350RG(D/S)12H20-90

* Specify "D" for Dial (Flange) Output or "S" for Shaft Output.

Other Motions (stops and index periods) available. Contact your IMC sales representative for more information.

Technical Specifications

Output Load Capacity – loads carried during index

	RGD	RGS
Radial	1935 lbs	3287 lbs
Thrust/Axial	1406 lbs	786 lbs
Moment	2419 in-lbs	5752 in-lbs

Accuracy	±41 arcsec / ±.0012" at 6" Radius
Repeatability	±21 arcsec / ±.0006" at 6" Radius

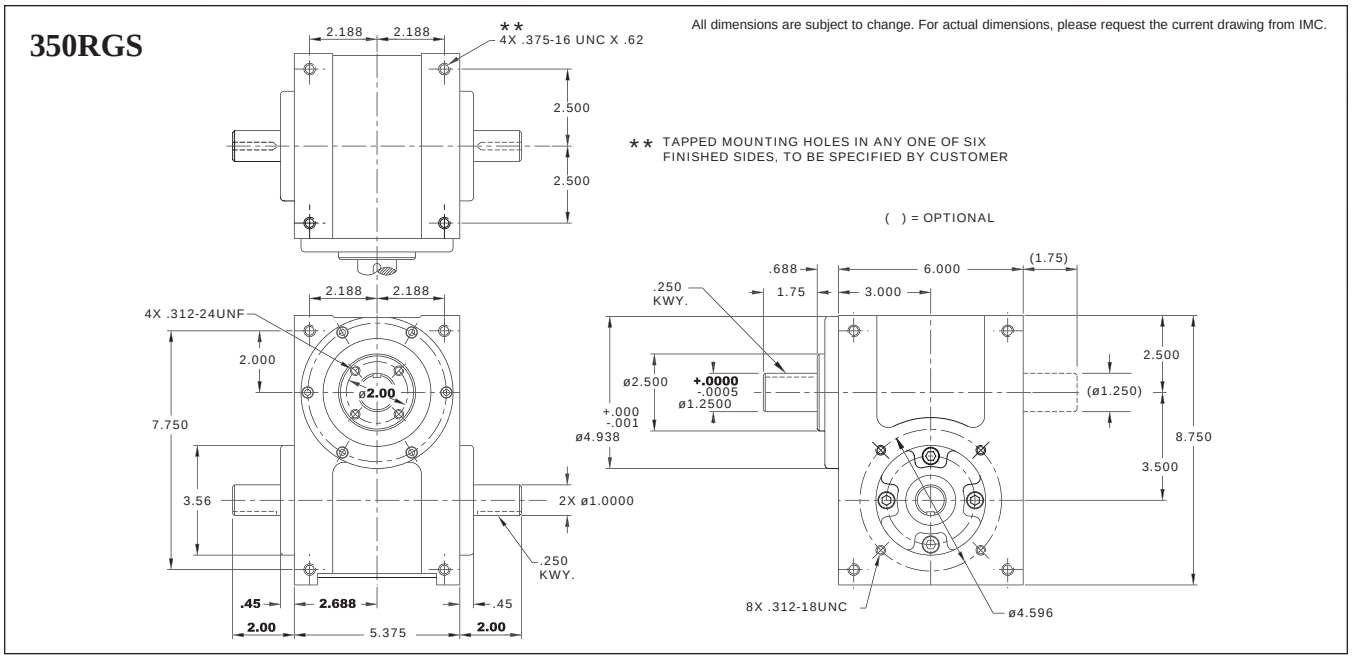

Standard Features

- Universal Mounting: mounting holes on any of 6 sides
- Right Hand Cam Standard
- Center Through Hole (.75 in. Diameter) in RGD version.

Accessories and Options

- R180 Reducer (Ratios from 5:1 to 60:1)
  - 1/3 hp DC Motor with Varipak DC Motor Control (up to 30 cpm)
  - 1/3 hp AC Drive Package with Inverter Duty Motor and Inverter Drive (up to 60 cpm)
- R225 Reducer (Ratios from 5:1 to 60:1)
  - 56C Motor Adapter and Coupling
  - 1 hp DC Motor with Varipak DC Motor Control (up to 30 cpm)
  - 1 hp AC Drive Package with Inverter Duty Motor and Inverter Drive (up to 60 cpm)
- Single or Dual Cycle Cam and Limit Switch
- Output Overload Clutch Models: 2.3F, 2.3FC, 2.3S and 2.3C
  - Settings (in-lbs): 400, 600, 700, 850, 1000, 1300, 1800, 2000, 2300
- Relief in Dwell for shot-pin applications
- Electric Clutch-Brake
- Air Clutch-Brake (with R225 Reducer only)
- Left Hand Cam
- Relief in Dwell for shot-pin applications

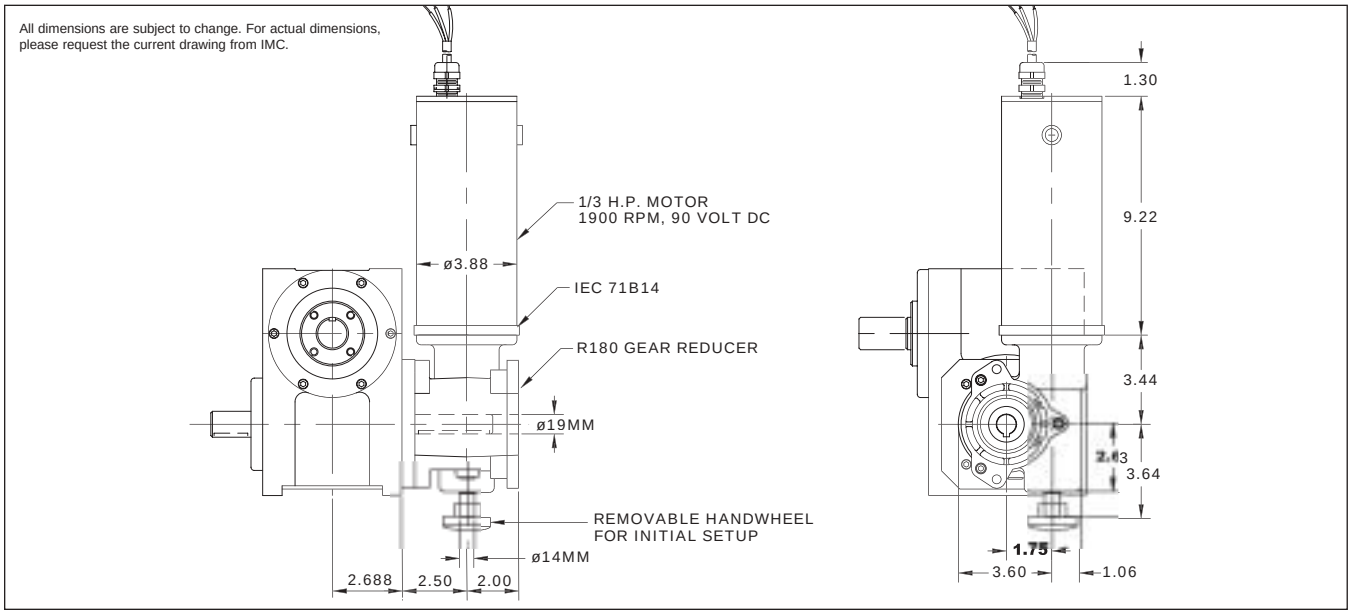

500RGD/500RGS

All dimensions are subject to change. For actual dimensions, please request the current drawing from IMC.

500RGD

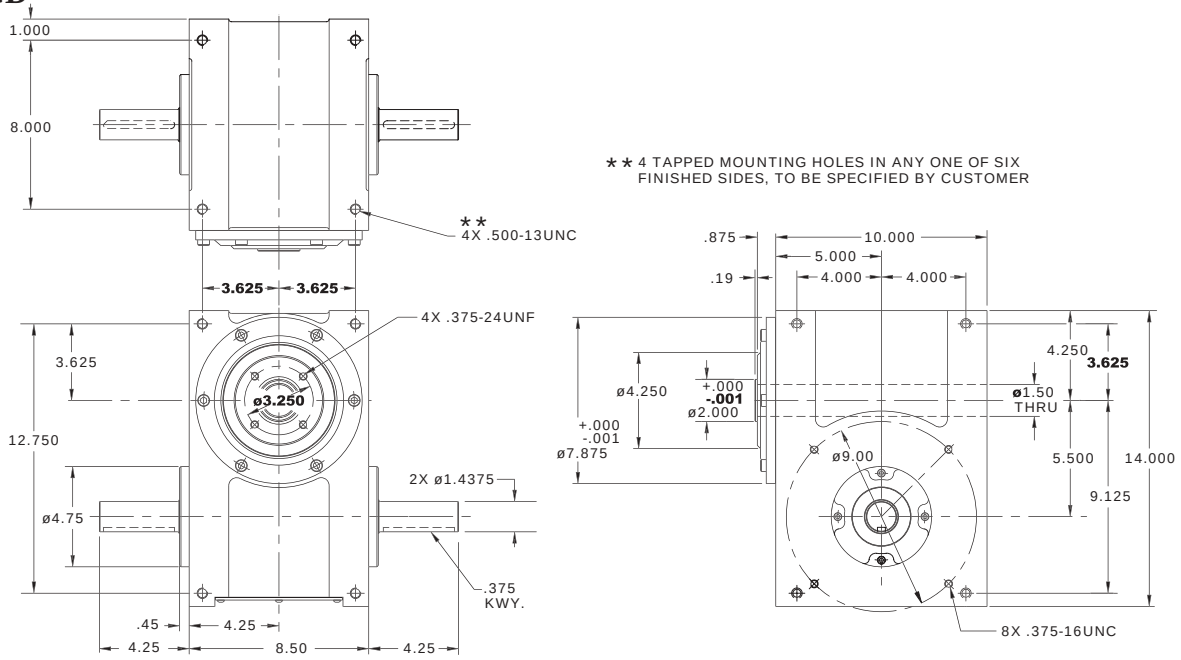

500RGD/RGS Indexer Capacities

Stops (S)	Index Period (β)	Motion	B_{10} Capacity at 50 RPM (in-lb)	RGD Internal Inertia (lb-in²)	RGS Internal Inertia (lb-in²)	Model*
1	330	msc.60	6767	62	45	500RG(D/S)1H40-330
2	270	ms	4400	62	45	500RG(D/S)2H40-270
3	270	ms	5265	62	45	500RG(D/S)3H40-270
	180	ms	5706	62	45	500RG(D/S)3H40-180
4	270	ms	6121	66	48	500RG(D/S)4H40-270
	180	ms	6971	66	48	500RG(D/S)4H40-180
	120	msc.20	3892	60	42	500RG(D/S)4H32-120
6	270	ms	5464	62	45	500RG(D/S)6H40-270
	180	ms	6091	62	45	500RG(D/S)6H40-180
	120	ms	6641	62	45	500RG(D/S)6H40-120
	90	ms	6909	62	45	500RG(D/S)6H40-90
8	270	ms	6151	66	48	500RG(D/S)8H40-270
	180	ms	7006	66	48	500RG(D/S)8H40-180
	120	ms	7726	66	48	500RG(D/S)8H40-120
	90	ms	8219	66	48	500RG(D/S)8H40-90
12	270	ms	2616	58	40	500RG(D/S)12H28-270
	180	ms	2960	58	40	500RG(D/S)12H28-180
	120	ms	3241	58	40	500RG(D/S)12H28-120
	90	ms	3449	58	40	500RG(D/S)12H28-90

* Specify "D" for Dial (Flange) Output or "S" for Shaft Output.

Other Motions (stops and index periods) available. Contact your IMC sales representative for more information.

Technical Specifications

Output Load Capacity – loads carried during index

	RGD	RGS
Radial	4004 lbs	6849 lbs
Thrust/Axial	2759 lbs	1433 lbs
Moment	8509 in-lbs	23562 in-lbs

Accuracy	±29 arcsec / ±.0008" at 6" Radius
Repeatability	±14 arcsec / ±.0004" at 6" Radius

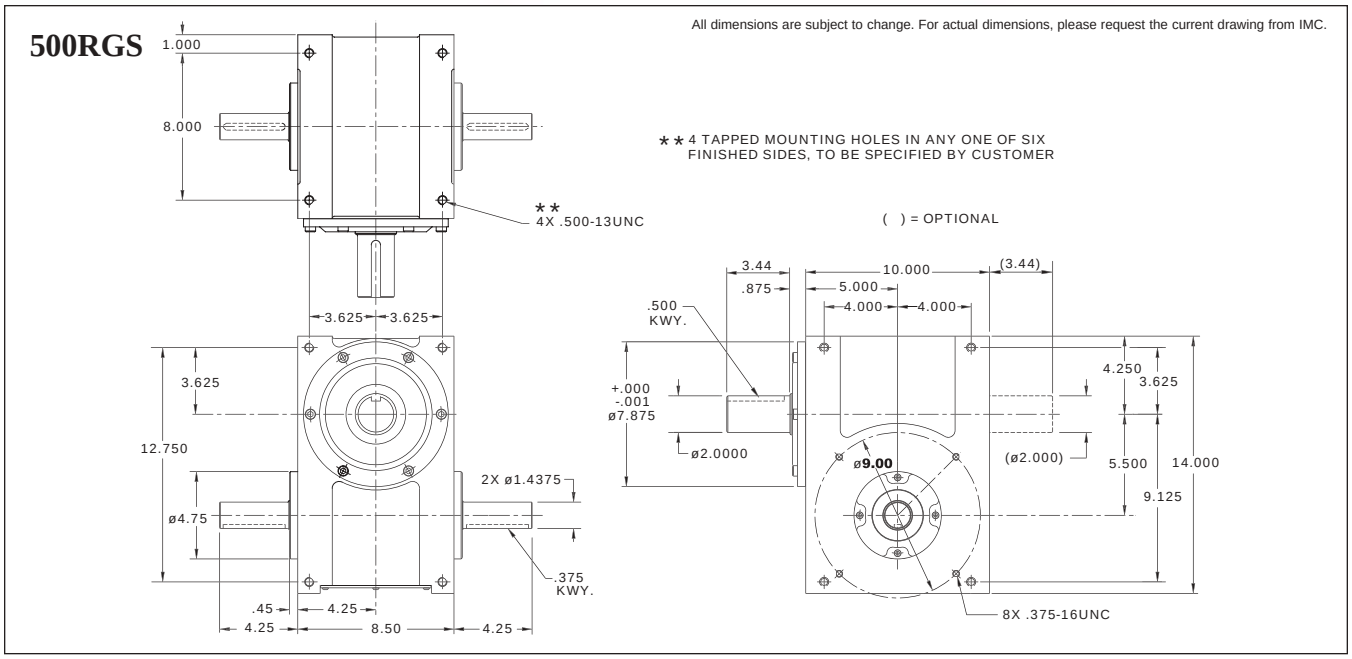

Standard Features

- Universal Mounting: mounting holes on any of 6 sides
- Right Hand Cam Standard
- Center Through Hole (1.50 in. Diameter) in RGD version.

Accessories and Options

- R225 Reducer (Ratios from 5:1 to 60:1)
  - 1 hp DC Motor with Varipak DC Motor Control (up to 30 cpm)
  - 1 hp AC Drive Package with Inverter Duty Motor and Inverter Drive (up to 60 cpm)
- Single or Dual Cycle Cam and Limit Switch
- Output Overload Clutch Models: 11S, 11C, 11F, 11C-SD, 11S-SD, 11FC-SD
  - Available Settings (in-lbs): 2300, 4000, 6000, 8500, 11000
- Left Hand Cam
- Relief in Dwell for shot-pin applications
- Electric Clutch-Brake
- Air Clutch-Brake
- Left Hand Cam
- Relief in Dwell for shot-pin applications

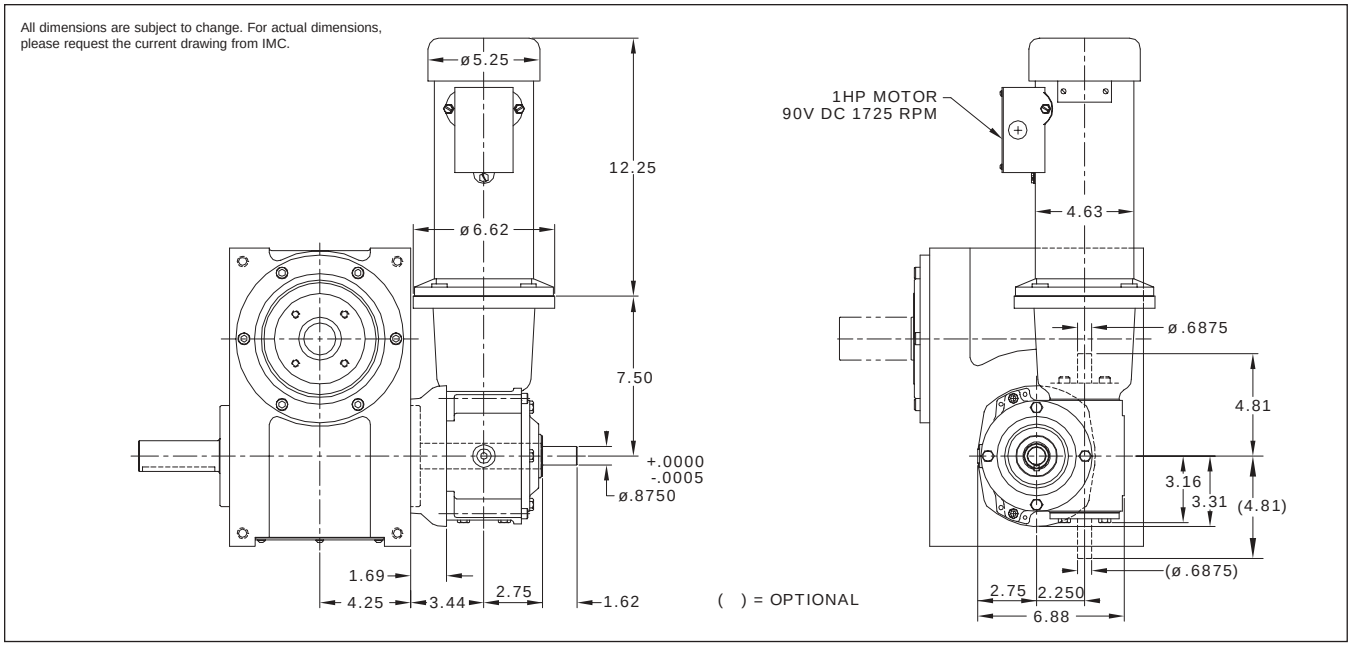

600RGD/600RGS

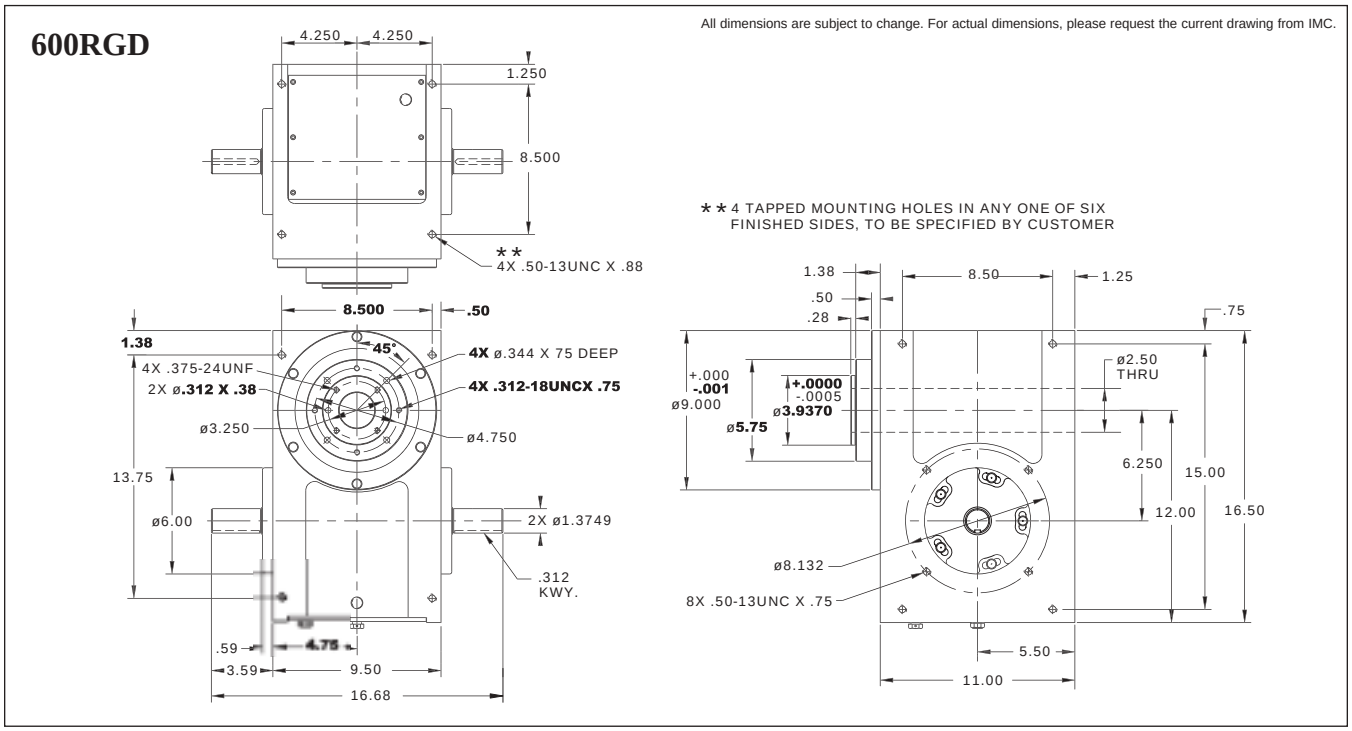

600RGD/RGS Indexer Capacities

Stops (S)	Index Period (β)	Motion	B_{10} Capacity at 50 RPM (in-lb)	RGD Internal Inertia (lb-in²)	RGS Internal Inertia (lb-in²)	Model*
2.0	300	ms	6516	256	137	600RG(D/S)2H48-300
3.0	270	ms	7955	256	137	600RG(D/S)3H48-270
	180	ms	8769	256	137	600RG(D/S)3H48-180
4.0	270	ms	6749	249	131	600RG(D/S)4H40-270
	180	ms	7477	249	131	600RG(D/S)4H40-180
6.0	270	ms	8286	256	137	600RG(D/S)6H48-270
	180	ms	9333	256	137	600RG(D/S)6H48-180
	120	ms	10286	256	137	600RG(D/S)6H48-120
	90	ms	10715	256	137	600RG(D/S)6H48-90
8.0	270	ms	6928	244	126	600RG(D/S)8H40-270
	180	ms	7747	244	126	600RG(D/S)8H40-180
	120	ms	8503	244	126	600RG(D/S)8H40-120
	90	ms	8936	244	126	600RG(D/S)8H40-90
12.0	270	ms	4091	244	126	600RG(D/S)12H32-270
	180	ms	4610	244	126	600RG(D/S)12H32-180
	120	ms	5096	244	126	600RG(D/S)12H32-120
	90	ms	5444	244	126	600RG(D/S)12H32-90
16.0	270	ms	9553	249	131	600RG(D/S)16H40-270 II
	120	ms	11684	249	131	600RG(D/S)16H40-120 II
	90	ms	12224	249	131	600RG(D/S)16H40-90 II

* Specify "D" for Dial (Flange) Output or "S" for Shaft Output.

Other Motions (stops and index periods) available. Contact your IMC sales representative for more information.

Technical Specifications

Output Load Capacity – loads carried during index

	RGD	RGS
Radial	5667 lbs	6960 lbs
Thrust/Axial	3528 lbs	3529 lbs
Moment	16292 in-lbs	33548 in-lbs

Accuracy	±40 arcsec / ±.0011" at 6" Radius
Repeatability	±20 arcsec / ±.0006" at 6" Radius

600RGS

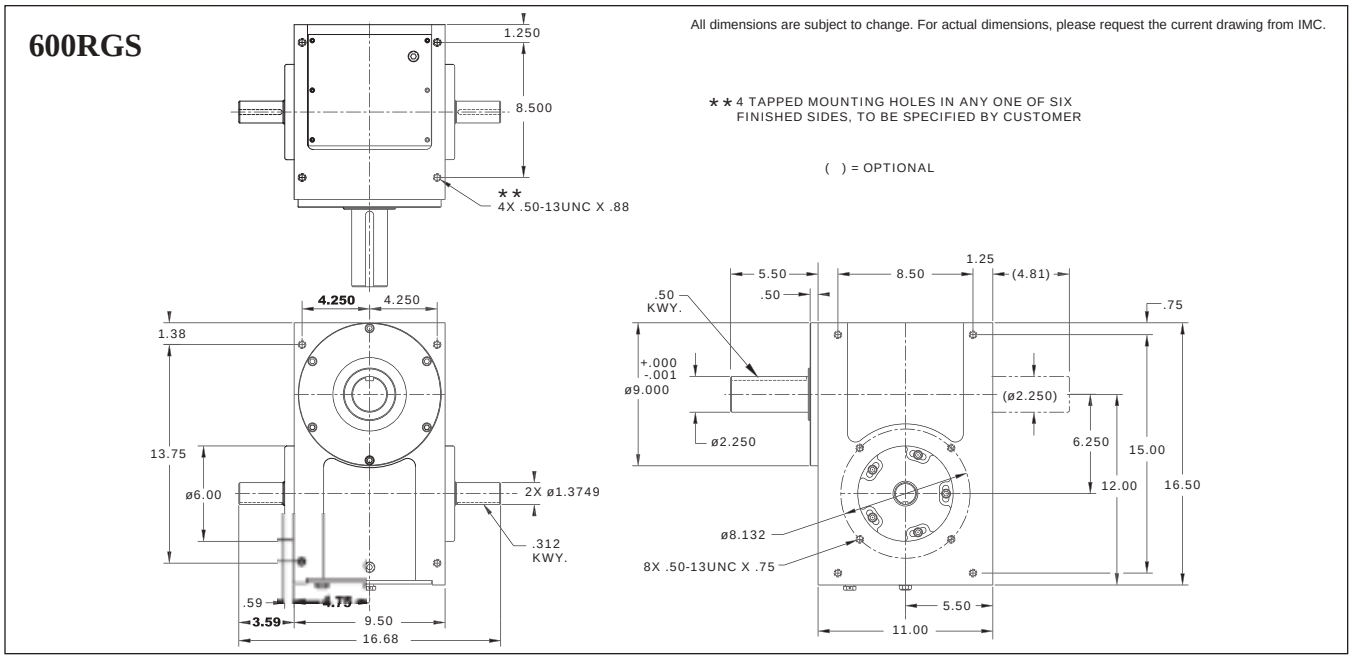

Standard Features

- Universal Mounting: mounting holes on any of 6 sides
- Right Hand Cam Standard
- Center Through Hole (1.50 in. Diameter) in RGD version.

Accessories and Options

- 7300C or 7350C Reducer (Ratios from 5:1 to 60:1)
- 1 or 2 hp DC Motor with Varipak DC Motor Control (up to 30 cpm)
- 1 or 2 hp AC Drive Package with Inverter Duty Motor and Inverter Drive (up to 60 cpm)
- Single or Dual Cycle Cam and Limit Switch
- Output Overload Clutch Models: 11FM, 11SM
  - Available Settings (in-lbs): 2300, 4000, 6000, 8500, 11000
- Left Hand Cam
- Relief in Dwell for shot-pin applications
- Electric Clutch-Brake
- Air Clutch-Brake
- Left Hand Cam
- Relief in Dwell for shot-pin applications

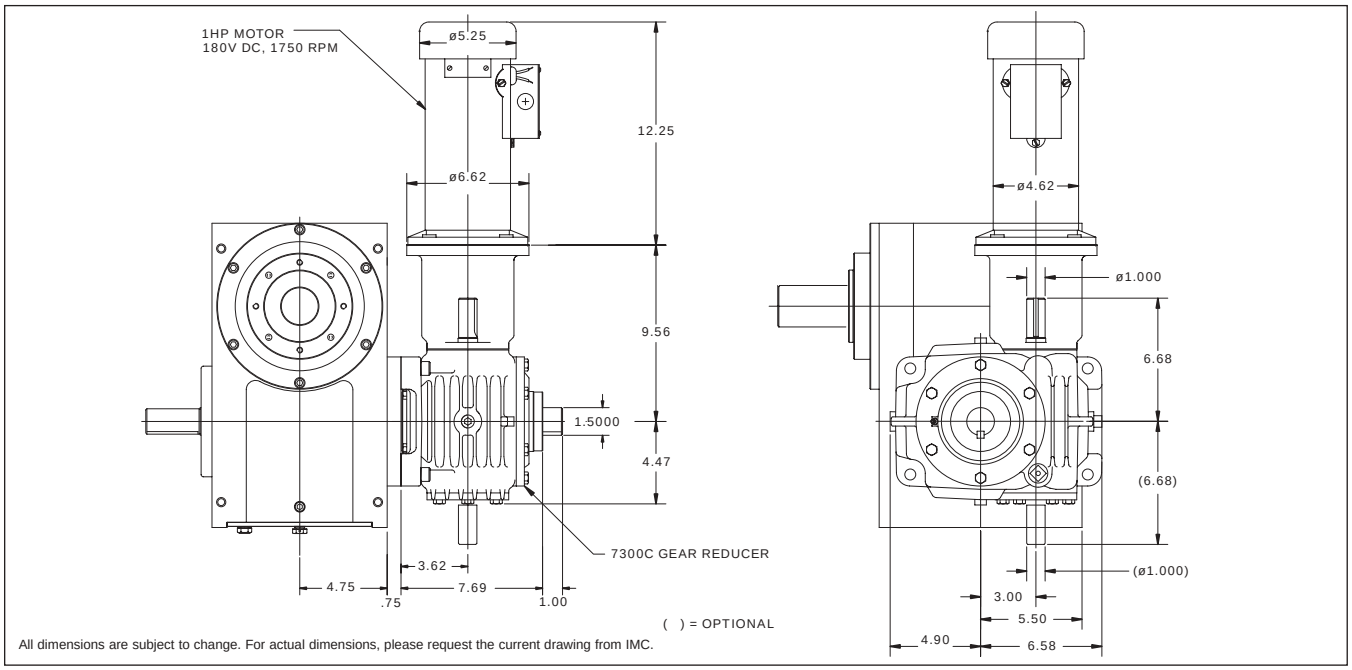

FD100F/FD100S

FD100F

All dimensions are subject to change. For actual dimensions, please request the current drawing from IMC.

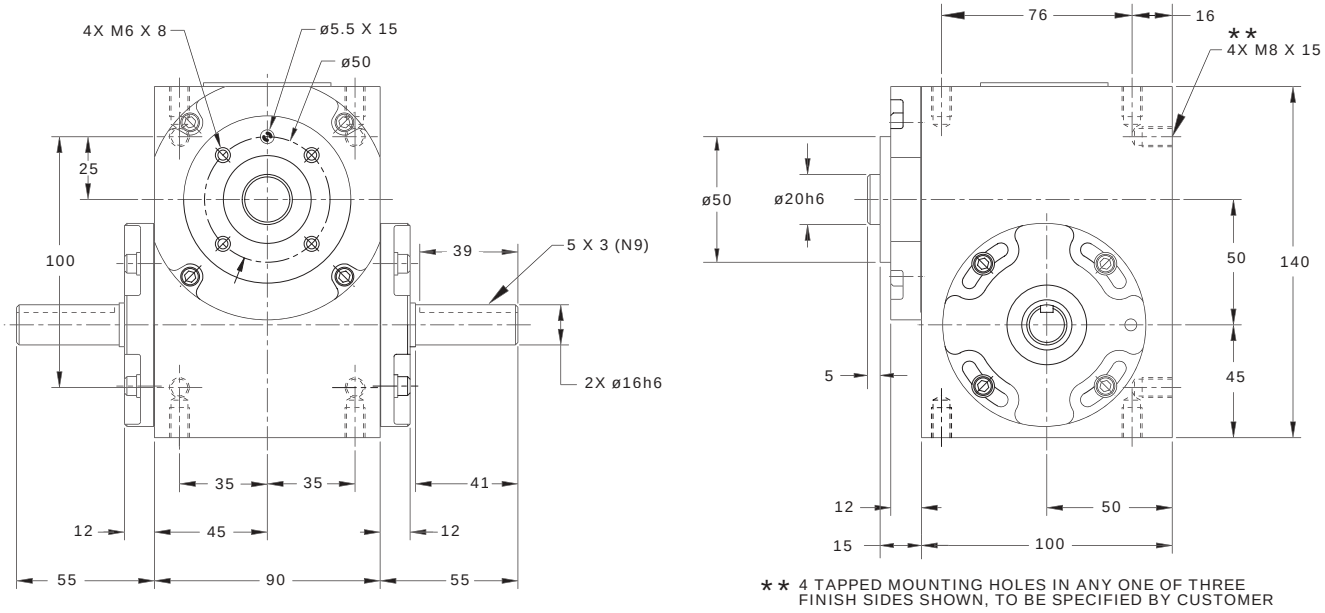

FD100F/FD100S Indexer Capacities

Stops (S)	Index Period (β)	Motion	B_{10} Capacity at 50 RPM (in-lb)	Type "F" Internal Inertia (lb-in²)	Type "S" Internal Inertia (lb-in²)	Model*
2	315	msc.30	252	2.0	0.5	FD100(F/S)-6/3-F50-315 MSC.30
3	270	ms	262	2.0	0.5	FD100(F/S)-6/2-F50-270
	180	msc.30	120	2.0	0.5	FD100(F/S)-6/2-F39-180 MSC.30
4	270	ms	180	2.1	0.5	FD100(F/S)-8/2-F50-270
	180	ms	139	2.1	0.5	FD100(F/S)-8/2-F39-180
6	270	ms	333	2.0	0.5	FD100(F/S)-6-F50-270
	180	ms	294	2.0	0.5	FD100(F/S)-6-F50-180
	120	ms	241	2.0	0.5	FD100(F/S)-6-F50-120
	90	ms	117	2.0	0.4	FD100(F/S)-6-F39-90
8	270	ms	351	2.1	0.5	FD100(F/S)-8-F50-270
	180	ms	324	2.1	0.5	FD100(F/S)-8-F50-180
	120	ms	281	2.1	0.5	FD100(F/S)-8-F50-120
	90	ms	138	2.0	0.4	FD100(F/S)-8-F39-90
12	270	ms	197	2.0	0.5	FD100(F/S)-12-F39-270
	180	ms	190	2.0	0.5	FD100(F/S)-12-F39-180
	120	ms	179	2.0	0.5	FD100(F/S)-12-F39-120
16	270	ms	351	2.0	0.5	FD100(F/S)-8X2-F50-135/135
	180	ms	179	2.0	0.4	FD100(F/S)-8X2-F39-90/90
24	270	ms	197	2.0	0.5	FD100(F/S)-12X2-F39-135/135
	180	ms	190	2.0	0.5	FD100(F/S)-12X2-F39-90/90

* Specify "F" for Flange (Dial) Output or "S" for Shaft Output

Other Motions (stops and index periods) available. Contact your IMC sales representative for more information.

Technical Specifications

Output Load Capacity – loads carried during index

	F	S
Radial	1075 lbs	730 lbs
Thrust/Axial	620 lbs	514 lbs
Moment	1058 in-lbs	1438 in-lbs

Accuracy	±68 arcsec / ±.001" at 3" Radius
Repeatability	±34 arcsec / ±.0005" at 3" Radius

FD100S

All dimensions are subject to change. For actual dimensions, please request the current drawing from IMC.

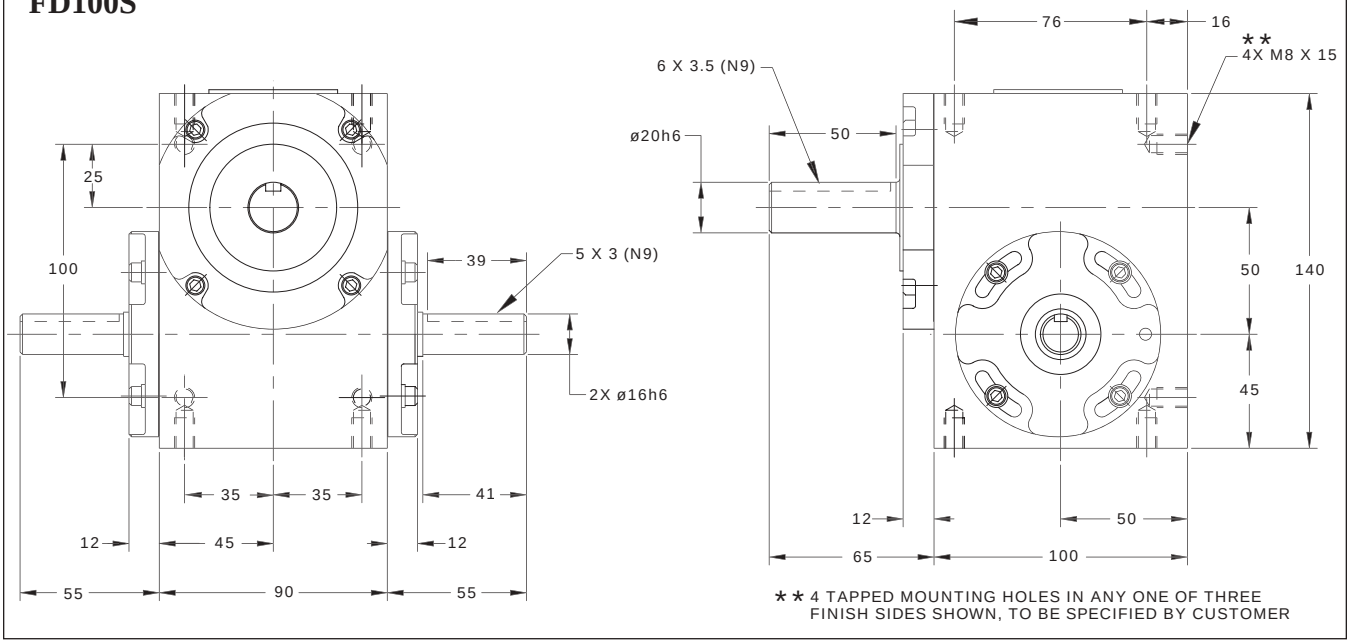

** 4 TAPPED MOUNTING HOLES IN ANY ONE OF THREE FINISH SIDES SHOWN, TO BE SPECIFIED BY CUSTOMER

Standard Features

- Universal Mounting: mounting holes on any of 3 sides
- Right Hand Cam

Accessories and Options

- .25 hp DC Gearmotor Drive Package
  - Direct Drive or Belt Drive
  - Varipak DC Motor Control (up to 30 cpm)
- Output Overload Clutch Models: RT3 F/S, RT3 F/F, RT3DF
  - Available Settings (in-lb), Adjustable Ranges: 100-175, 175-275, 250-350, 325-500
- Single or Dual Cycle Cam and Limit Switch
- Left Hand Cam
- Relief in Dwell for shot-pin applications

All dimensions are subject to change. For actual dimensions, please request the current drawing from IMC.

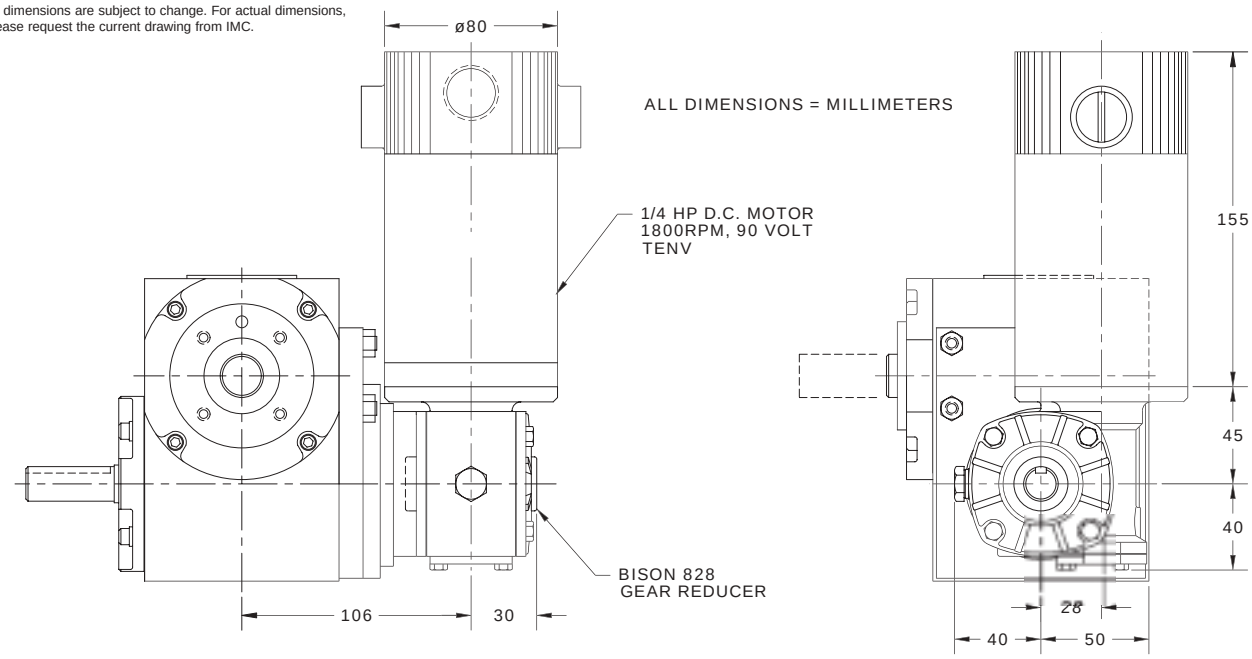

FD162F/FD162S

All dimensions are subject to change. For actual dimensions, please request the current drawing from IMC.

FD162F

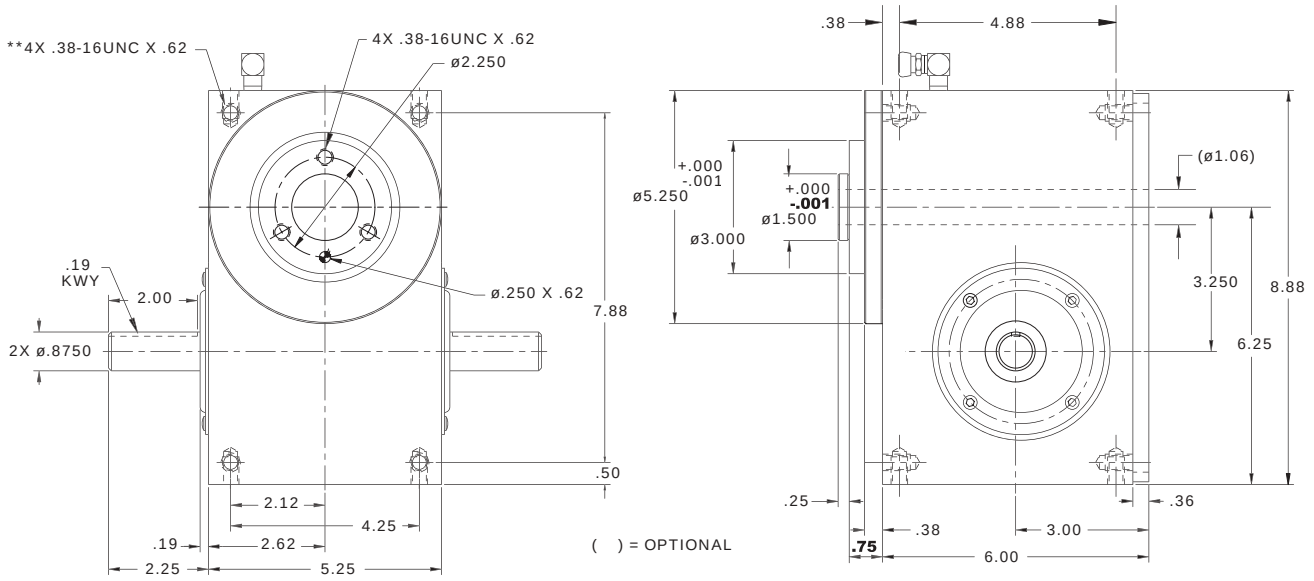

FD162F/FD162S Indexer Capacities

Stops (S)	Index Period (β)	Motion	B_{10} Capacity at 50 RPM (in-lb)	Type "F" Internal Inertia (lb-in²)	Type "S" Internal Inertia (lb-in²)	Model*
2	300	ms	1053	11	4.2	FD162(F/S)-6/3-F75-300
3	270	ms	1340	11	4.2	FD162(F/S)-6/2-F75-270
	180	ms	1157	11	4.2	FD162(F/S)-6/2-F75-180
4	270	ms	1691	11	4.6	FD162(F/S)-8/2-F75-270
	180	msc.10	1758	11	4.6	FD162(F/S)-8/2-F75-180 MSC.10
6	270	ms	1512	11	4.2	FD162(F/S)-6-F75-270
	180	ms	1560	11	4.2	FD162(F/S)-6-F75-180
	120	ms	1526	11	4.2	FD162(F/S)-6-F75-120
8	270	ms	1821	11	4.6	FD162(F/S)-8-F75-270
	180	ms	1907	11	4.6	FD162(F/S)-8-F75-180
	120	ms	1939	11	4.6	FD162(F/S)-8-F75-120
12	270	ms	1278	11	4.4	FD162(F/S)-12-F62-270
	180	ms	1347	11	4.4	FD162(F/S)-12-F62-180
	120	ms	1396	11	4.4	FD162(F/S)-12-F62-120
16	270	ms	2044	11	4.6	FD162(F/S)-8X2-F75-135/135
	180	ms	2201	11	4.6	FD162(F/S)-8X2-F75-90/90
	120	ms	2283	11	4.6	FD162(F/S)-8X2-F75-60/60
24	270	ms	1432	11	4.4	FD162(F/S)-12X2-F62-135/135
	180	ms	1552	11	4.4	FD162(F/S)-12X2-F62-90/90
	120	ms	1643	11	4.4	FD162(F/S)-12X2-F62-60/60

* Specify "F" for Flange (Dial) Output or "S" for Shaft Output

Other Motions (stops and index periods) available. Contact your IMC sales representative for more information.

Technical Specifications

Output Load Capacity – loads carried during index

	F	S
Radial	1465 lbs	2876 lbs
Thrust/Axial	1112 lbs	1112 lbs
Moment	2197 in-lbs	5752 in-lbs

Accuracy	±45 arcsec / ±.0007" at 3" Radius
Repeatability	±22 arcsec / ±.0003" at 3" Radius

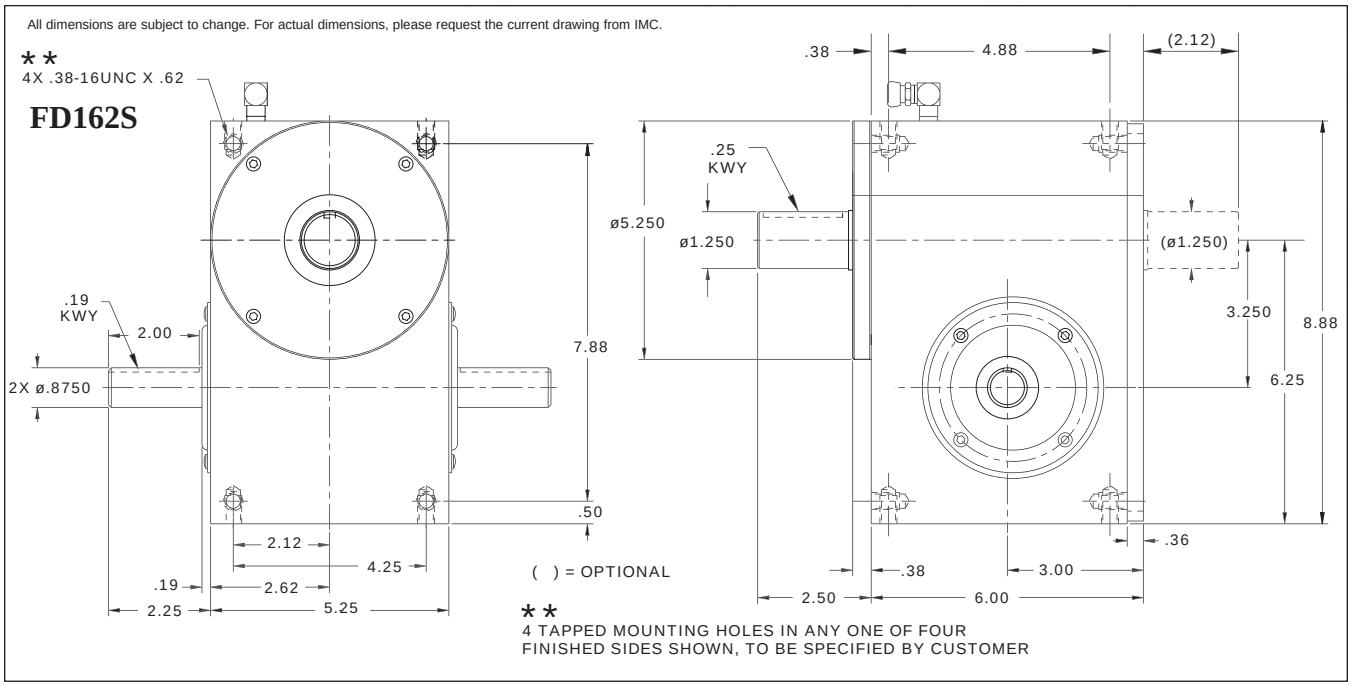

Standard Features

- Universal Mounting: mounting holes on any of 3 sides
- Right Hand Cam

Accessories and Options

- 20CDSF Reducer with 56C Motor Adapter (Ratios of 5:1 to 60:1)
- 1/2 or 1 hp DC Motor with Varipak DC Motor Control (up to 30 cpm)
- 1/3 or 1 hp AC Drive Package with Inverter Duty Motor and Inverter Drive (up to 60 cpm)
- Output Overload Clutch Models: RT5 F/S, RT5 F/F, RT5DF
  - Available Settings (in-lb), Adjustable Ranges: 500-850, 800-1700, 1600-3000
- Single or Dual Cycle Cam and Limit Switch
- Left Hand Cam
- Relief in Dwell for shot-pin applications

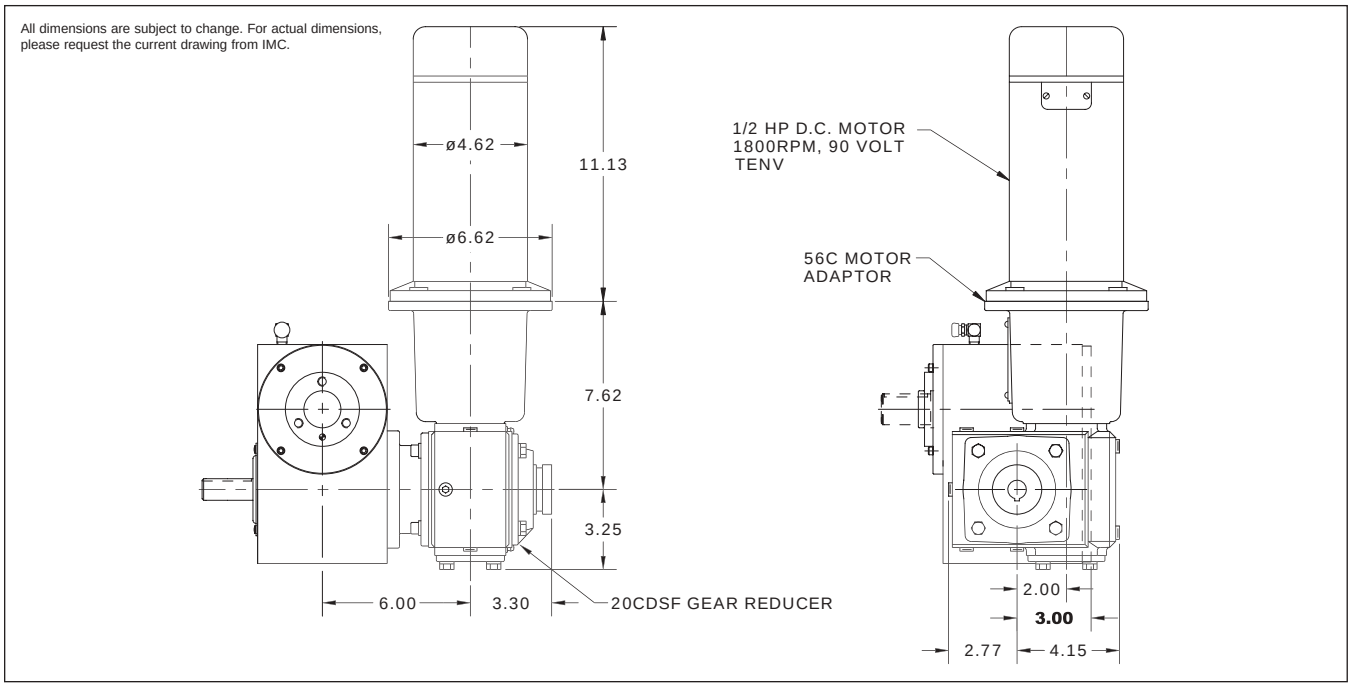

FD200F/FD200S

All dimensions are subject to change. For actual dimensions, please request the current drawing from IMC.

FD200F

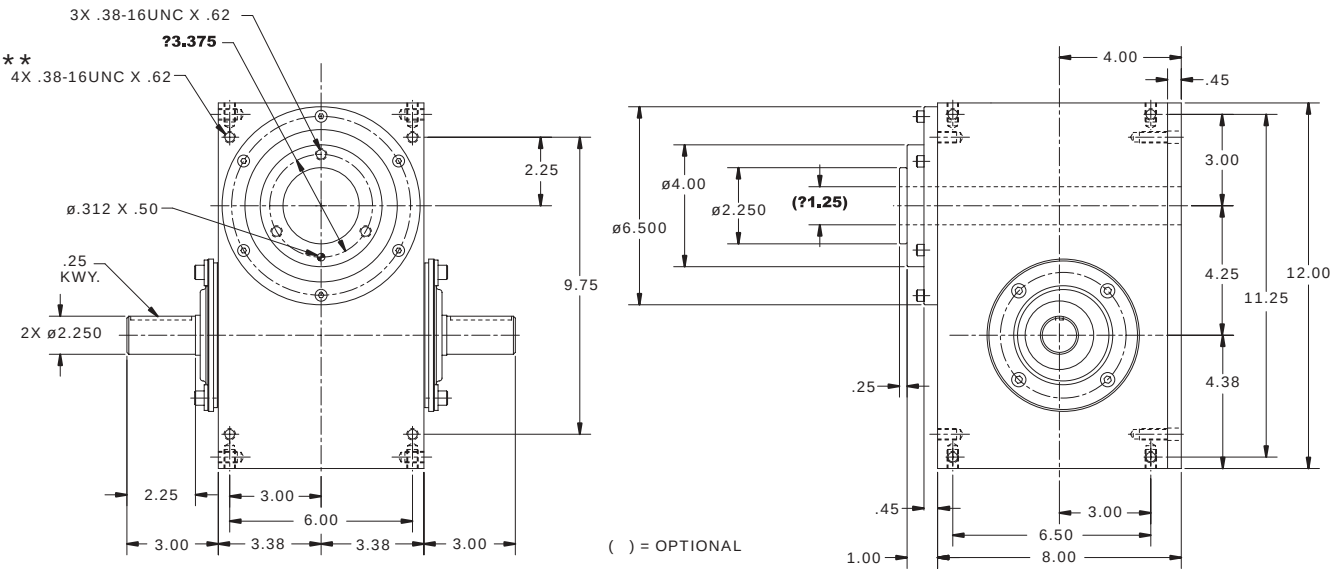

** 4 TAPPED MOUNTING HOLES IN ANY ONE OF SIX FINISHED SIDES SHOWN, TO BE SPECIFIED BY CUSTOMER

FD200F/FD200S Indexer Capacities

Stops (S)	Index Period (β)	Motion	B_{10} Capacity at 50 RPM (in-lb)	Type "F" Internal Inertia (lb-in²)	Type "S" Internal Inertia (lb-in²)	Model*
2	300	ms	1827	32	14	FD200(F/S)-6/3-F100-300
3	270	ms	2248	32	14	FD200(F/S)-6/2-F100-270
	180	ms	2033	32	14	FD200(F/S)-6/2-F100-180
4	270	ms	2710	33	15	FD200(F/S)-8/2-F100-270
	180	ms	2704	33	15	FD200(F/S)-8/2-F100-180
6	270	ms	2486	32	14	FD200(F/S)-6-F100-270
	180	ms	2580	32	14	FD200(F/S)-6-F100-180
	120	ms	2581	32	14	FD200(F/S)-6-F100-120
8	270	ms	2990	33	15	FD200(F/S)-8-F100-270
	180	ms	3135	33	15	FD200(F/S)-8-F100-180
	120	ms	3214	33	15	FD200(F/S)-8-F100-120
12	270	ms	2214	31	14	FD200(F/S)-12-F75-270
	180	ms	2768	31	14	FD200(F/S)-12-F75-180
	120	ms	2874	31	14	FD200(F/S)-12-F75-120
16	270	ms	3350	33	15	FD200(F/S)-8X2-F100-135/135
	180	ms	3616	33	15	FD200(F/S)-8X2-F100-90/90
	120	ms	3784	33	15	FD200(F/S)-8X2-F100-60/60
24	270	ms	2936	31	14	FD200(F/S)-12X2-F75-135/135
	180	ms	3189	31	14	FD200(F/S)-12X2-F75-90/90
	120	ms	3382	31	14	FD200(F/S)-12X2-F75-60/60

* Specify "F" for Flange (Dial) Output or "S" for Shaft Output

Other Motions (stops and index periods) available. Contact your IMC sales representative for more information.

Technical Specifications

Output Load Capacity – loads carried during index

	F	S
Radial	1871 lbs	3615 lbs
Thrust/Axial	1187 lbs	1246 lbs
Moment	3742 in-lbs	9940 in-lbs

Accuracy	±36 arcsec / ±.001" at 6" Radius
Repeatability	±18 arcsec / ±.0005" at 6" Radius

FD200S

All dimensions are subject to change. For actual dimensions, please request the current drawing from IMC.

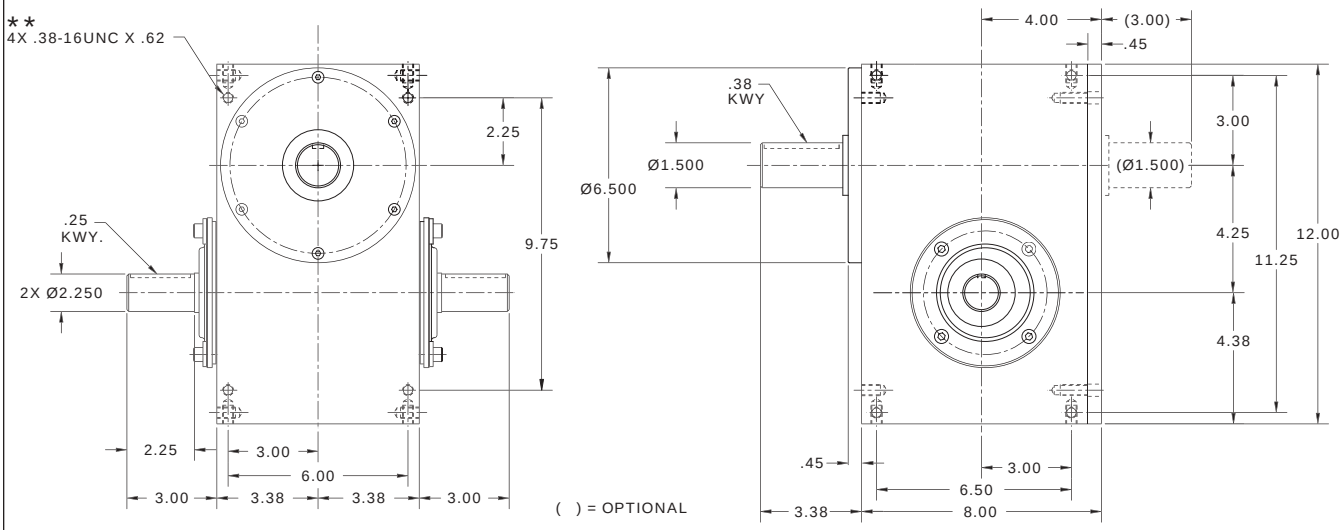

** 4 TAPPED MOUNTING HOLES IN ANY ONE OF SIX FINISHED SIDES SHOWN, TO BE SPECIFIED BY CUSTOMER

Standard Features

- Universal Mounting: mounting holes on any of 4 sides
- Right Hand Cam

Accessories and Options

- Center Through Hole (1.25 in. Diameter) in F version.
- 26CDSF Reducer with 56C Motor Adapter (Ratios of 5:1 to 60:1)
- 1/2 or 1 hp DC Motor with Varipak DC Motor Control (up to 30 cpm)
- 1/2 or 1 hp AC Drive Package with Inverter Duty Motor and Inverter Drive (up to 60 cpm)
- Output Overload Clutch Models: RT5 F/S, RT5 F/F, RT5DF
  - Available Settings (in-lb), Adjustable Ranges: 500-850, 800-1700, 1600-3000
- Single or Dual Cycle Cam and Limit Switch
- Left Hand Cam
- Relief in Dwell for shot-pin applications

All dimensions are subject to change. For actual dimensions, please request the current drawing from IMC.

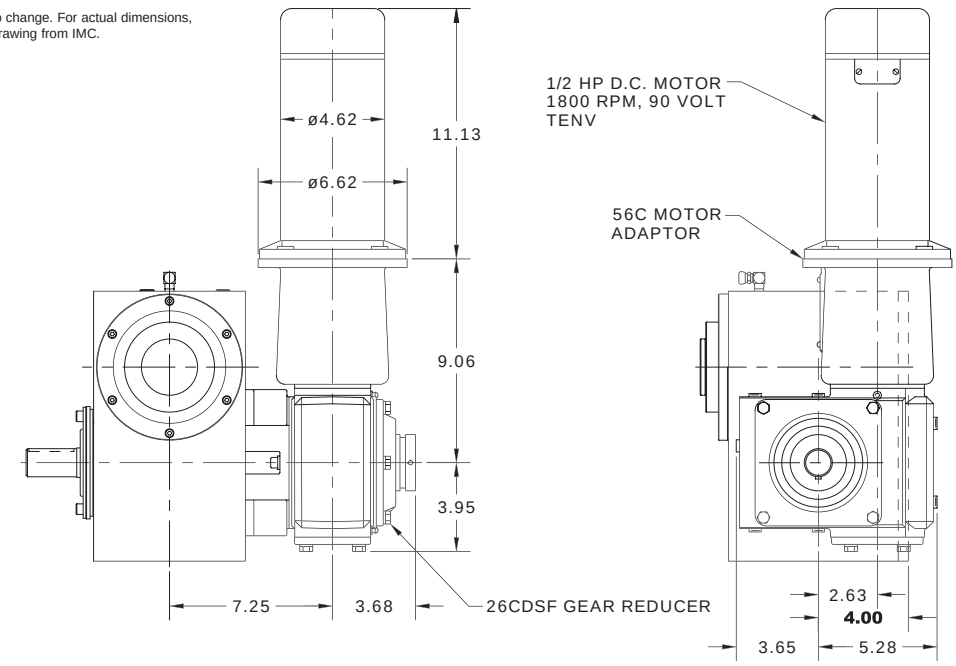

FD250F/FD250S

FD250F

All dimensions are subject to change. For actual dimensions, please request the current drawing from IMC.

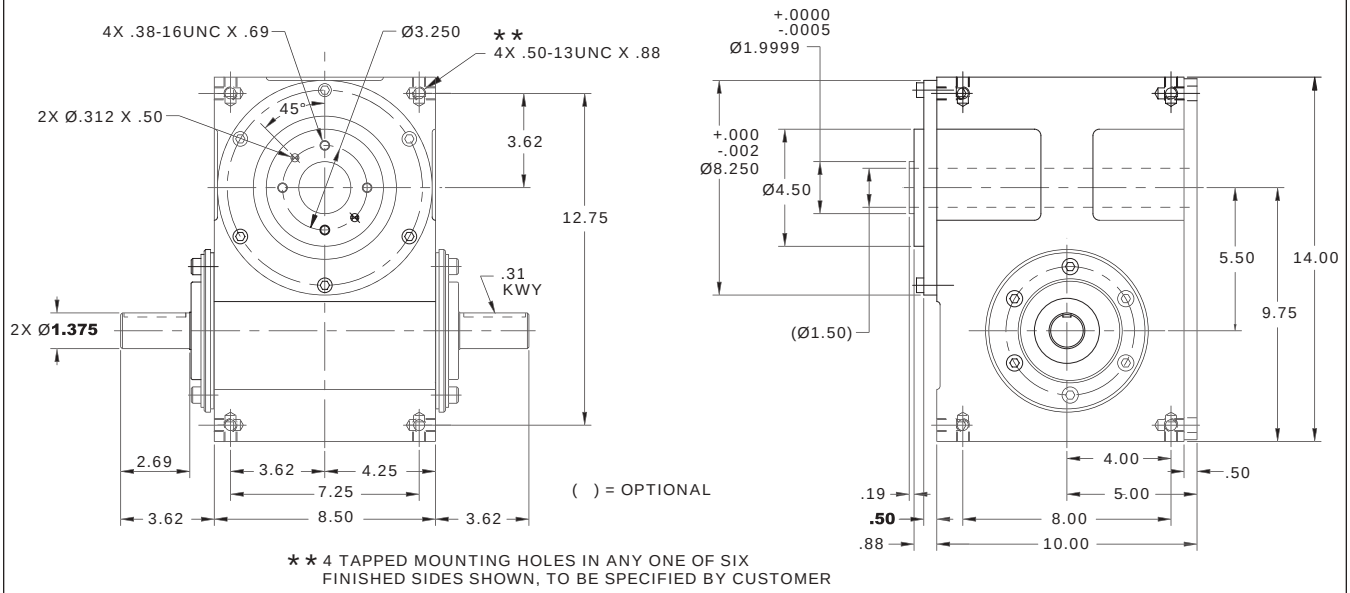

FD250F/FD250S Indexer Capacities

Stops (S)	Index Period (β)	Motion	B_{10} Capacity at 50 RPM (in-lb)	Type "F" Internal Inertia (lb-in²)	Type "S" Internal Inertia (lb-in²)	Model*
2	300	ms	5462	80	67	FD250(F/S)-6/3-F150-300
3	270	ms	6984	80	67	FD250(F/S)-6/2-F150-270
	180	msc.20	6753	80	67	FD250(F/S)-6/2-F150-180 MSC.20
4	270	ms	6738	76	63	FD250(F/S)-8/2-F125-270
	180	ms	6385	76	63	FD250(F/S)-8/2-F125-180
6	270	ms	7872	80	67	FD250(F/S)-6-F150-270
	180	ms	8117	80	67	FD250(F/S)-6-F150-180
	120	ms	9483	80	67	FD250(F/S)-6-F150-120
8	270	ms	7275	73	60	FD250(F/S)-8-F125-270
	180	ms	7606	73	60	FD250(F/S)-8-F125-180
	120	ms	7730	73	60	FD250(F/S)-8-F125-120
12	270	ms	4952	72	61	FD250(F/S)-12-F100-270
	180	ms	5221	72	61	FD250(F/S)-12-F100-180
	120	ms	5410	72	61	FD250(F/S)-12-F100-120
16	270	ms	8150	73	60	FD250(F/S)-8X2-F125-135/135
	180	ms	8775	73	60	FD250(F/S)-8X2-F125-90/90
	120	ms	9105	73	60	FD250(F/S)-8X2-F125-60/60
24	270	ms	5545	72	61	FD250(F/S)-12X2-F100-135/135
	180	ms	6017	72	61	FD250(F/S)-12X2-F100-90/90
	120	ms	6366	72	61	FD250(F/S)-12X2-F100-60/60

* Specify "F" for Flange (Dial) Output or "S" for Shaft Output

Other Motions (stops and index periods) available. Contact your IMC sales representative for more information.

Technical Specifications

Output Load Capacity – loads carried during index

	F	S
Radial	3015 lbs	2878 lbs
Thrust/Axial	2133 lbs	2069 lbs
Moment	6784 in-lbs	7656 in-lbs

Accuracy	±26 arcsec / ±.0008" at 6" Radius
Repeatability	±13 arcsec / ±.0004" at 6" Radius

FD250S

All dimensions are subject to change. For actual dimensions, please request the current drawing from IMC.

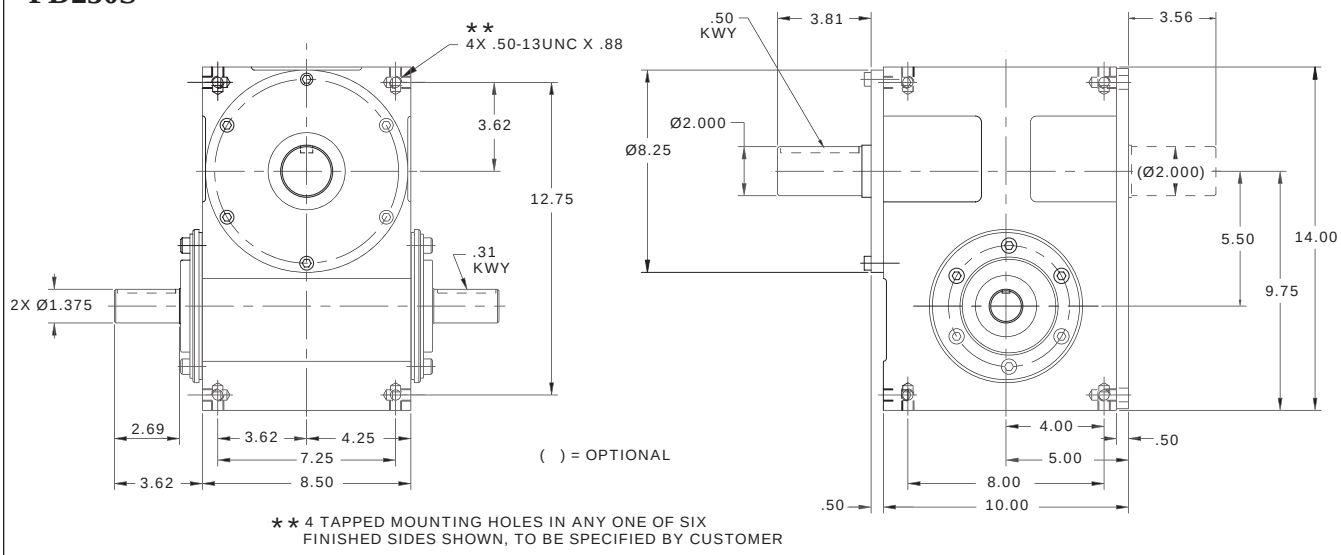

Standard Features

- Universal Mounting: mounting holes on any of 6 sides
- Right Hand Cam

Accessories and Options

- Center Through Hole (1.5 in. Diameter) in F version.
- 30CDSF Reducer with 56C Motor Adapter (Ratios of 5:1 to 60:1)
- R3 Reducer with 56C Motor Adapter (Ratios of 5:1 to 60:1)
- R3 FSC Input Overload Clutch
- 1 hp DC Motor with Varipak DC Motor Control (up to 30 cpm)
- 1 hp AC Drive Package with Inverter Duty Motor and Inverter Drive (up to 60 cpm)
- Output Overload Clutch Models: RT6 F/S, RT6 F/F, RT6DF
  - Available Settings (in-lb), Adjustable Ranges: 1000-2700, 2500-5000, 4000-8500
- R3 FSC Input Overload Clutch
- Single or Dual Cycle Cam and Limit Switch
- Left Hand Cam
- Relief in Dwell for shot-pin applications

All dimensions are subject to change. For actual dimensions, please request the current drawing from IMC.

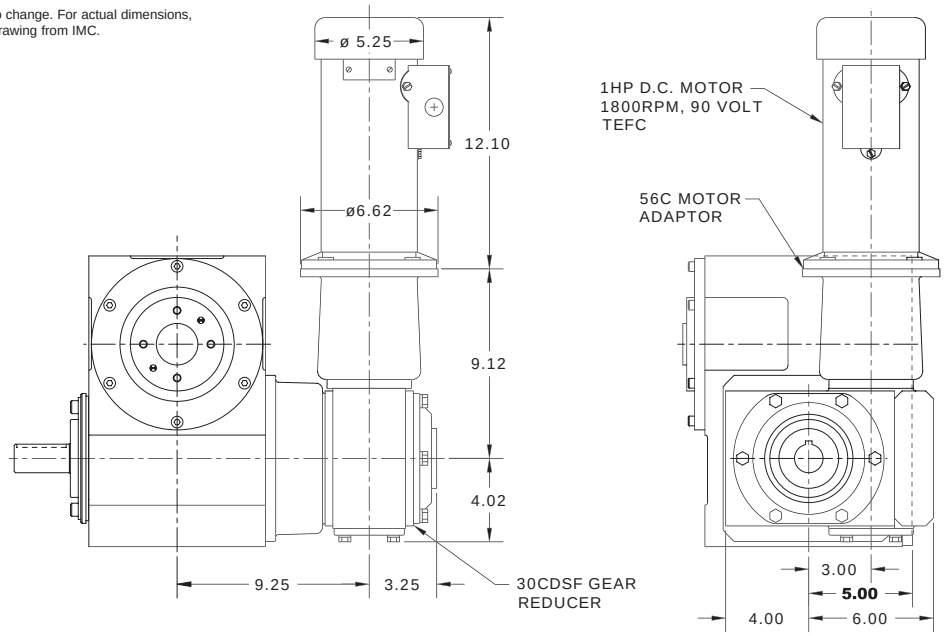

FD300F/FD300S

All dimensions are subject to change. For actual dimensions, please request the current drawing from IMC.

FD300F

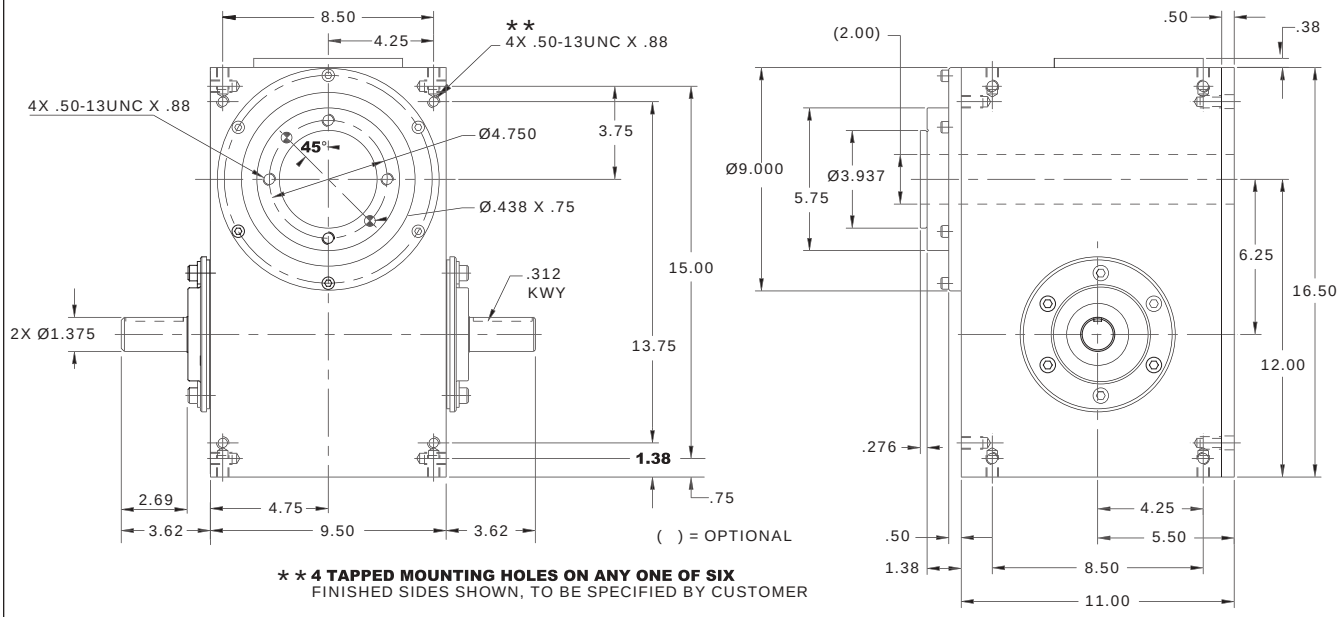

FD300F/FD300S Indexer Capacities

Stops (S)	Index Period (β)	Motion	B_{10} Capacity at 50 RPM (in-lb)	Type "F" Internal Inertia (lb-in²)	Type "S" Internal Inertia (lb-in²)	Model*
2	300	ms	8188	241	118	FD300(F/S)-6/3-F175-300
3	270	ms	10215	241	118	FD300(F/S)-6/2-F175-270
	180	msc.20	10008	241	118	FD300(F/S)-6/2-F175-180 MSC.20
4	270	ms	9207	236	113	FD300(F/S)-8/2-F150-270
	180	ms	8862	236	113	FD300(F/S)-8/2-F150-180
6	270	ms	11352	241	118	FD300(F/S)-6-F175-270
	180	ms	11764	241	118	FD300(F/S)-6-F175-180
	120	ms	11655	241	118	FD300(F/S)-6-F175-120
8	270	ms	9859	236	113	FD300(F/S)-8-F150-270
	180	ms	10327	236	113	FD300(F/S)-8-F150-180
	120	ms	10539	236	113	FD300(F/S)-8-F150-120
12	270	ms	5139	219	96	FD300(F/S)-12-F100-270
	180	ms	5422	219	96	FD300(F/S)-12-F100-180
	120	ms	5627	219	96	FD300(F/S)-12-F100-120
16	270	ms	11044	236	113	FD300(F/S)-8X2-F150-135/135
	180	ms	11910	236	113	FD300(F/S)-8X2-F150-90/90
	120	ms	12410	236	113	FD300(F/S)-8X2-F150-60/60
24	270	ms	5753	219	96	FD300(F/S)-12X2-F100-135/135
	180	ms	6247	219	96	FD300(F/S)-12X2-F100-90/90
	120	ms	6620	219	96	FD300(F/S)-12X2-F100-60/60

* Specify "F" for Flange (Dial) Output or "S" for Shaft Output

Other Motions (stops and index periods) available. Contact your IMC sales representative for more information.

Technical Specifications

Output Load Capacity – loads carried during index

	F	S
Radial	2555 lbs	6869 lbs
Thrust/Axial	1235 lbs	2427 lbs
Moment	7347 in-lbs	23562 in-lbs

Accuracy	±40 arcsec / ±.0011" at 6" Radius
Repeatability	±20 arcsec / ±.0006" at 6" Radius

FD300S

All dimensions are subject to change. For actual dimensions, please request the current drawing from IMC.

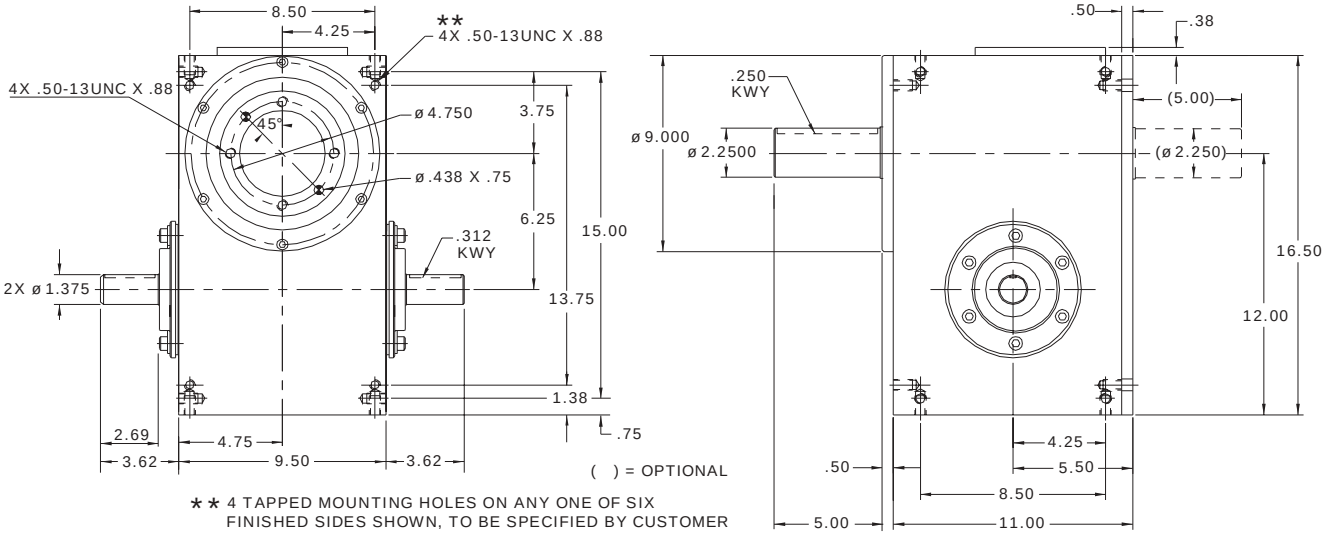

Standard Features

- Universal Mounting: mounting holes on any of 6 sides
- Right Hand Cam

Accessories and Options

- Center Through Hole (2.0 in. Diameter) in F version.
- 6SFM Reducer with 56C Motor Adapter (Ratios of 5:1 to 60:1)
- R3 Reducer with 56C Motor Adapter (Ratios of 5:1 to 60:1)
- R3 FSC Input Overload Clutch
- 1 or 2 hp DC Motor with Varipak DC Motor Control (up to 30 cpm)
- 1 or 2 hp AC Drive Package with Inverter Duty Motor and Inverter Drive (up to 60 cpm)
- Output Overload Clutch Models: DTL-10
  - Available Settings (in-lb), Adjustable Range: 1800-4400
- R3 FSC Input Overload Clutch
- Single or Dual Cycle Cam and Limit Switch
- Left Hand Cam
- Relief in Dwell for shot-pin applications

All dimensions are subject to change. For actual dimensions, please request the current drawing from IMC.

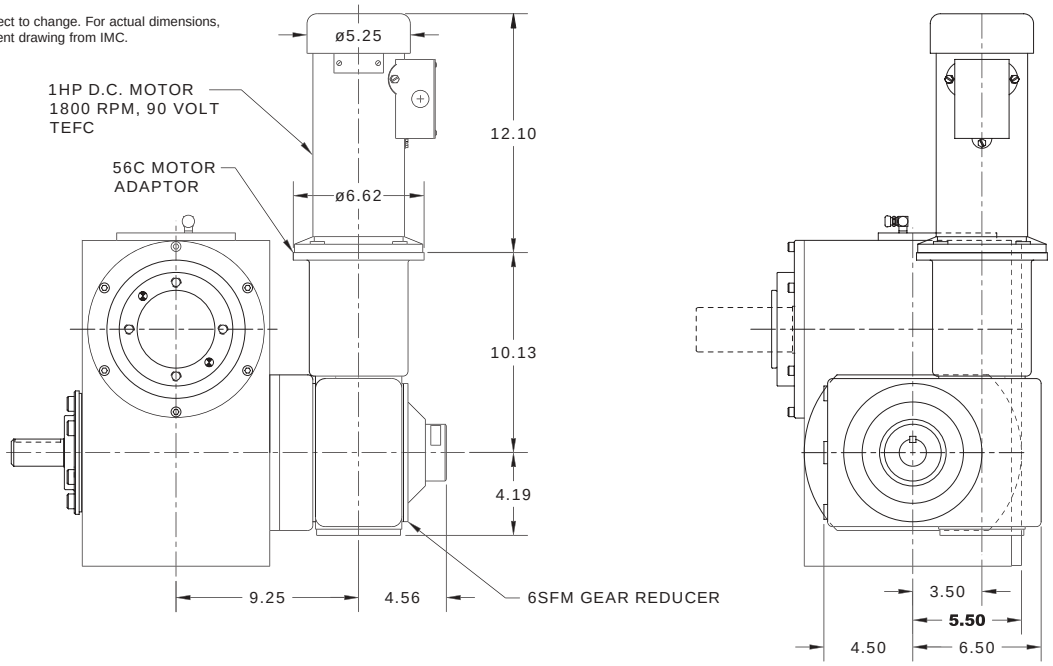

D

Sentry Series: Internal Torque Limiter

In addition to the standard Roller Gear series features, the **Sentry Series Index Drives** incorporate the **patented Internal Torque Limiter**, available only from IMC, as a standard feature. The advantages of the Internal Torque Limiter include:

- **Ideal for Harsh Environments.** Dusty, dirty, humid and washdown environments do not reduce indexer or machine performance due to the Sentry Series totally enclosed design.
- **Provides For Overload Protection.** The Sentry Series recognizes machine jams and disengages the drive. This reduces downtime, eliminates the need for costly spare parts, prolongs indexer life, improves output and increases productivity.
- **Reduces Assembly Time.** External clutches or torque limiters require an additional alignment operation and add overall tolerances to placement accuracy. With the addition of an Internal Torque Limiter, the time required for installation has been significantly reduced.
- **Self Lubricating.** The clutch is housed in an oil bath with no additional lubrication needed. An optional lubrication monitoring system signals host computers when oil is low or abnormally high in temperature.

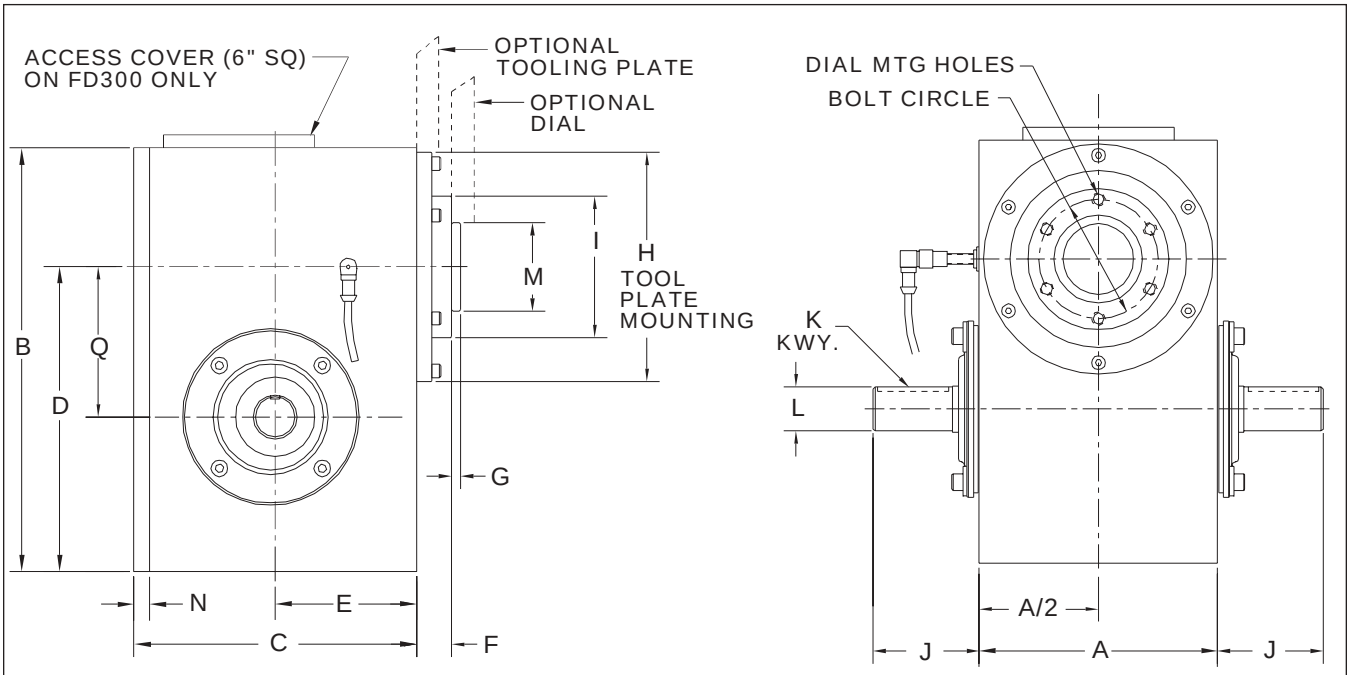

All dimensions are subject to change. For actual dimensions, please request the current drawing from IMC.

Sentry Series: Internal Torque Limiter

Model	A	B	C	D	E	F	G	H	I	J	K	L	M	N	Q	Dial Mtg Holes*	Dowel Holes*	Bolt Circle
S162	5.25	8.88	6.00	6.25	3.00	.75	.25	5.25	3.00	2.25	3/16 x 3/32	.88	1.50	.38	3.25	(3)3/8-16 5/8 DP	(1) 1/4 5/8 DP	2.25
S200	6.75	12.00	8.00	8.63	400	1.00	.25	6.50	4.00	3.00	1/4 x 1/8	1.25	2.50	.45	4.25	(3)3/8-16 5/8 DP	(1)5/16 1/2 DP	3.38
S250	8.50	14.00	10.00	9.75	5.00	.875	.19	8.25	4.50	3.59	5/16 x 5/32	1.38	2.00	.50	5.50	(4)3/8-16 11/16 DP	(2)5/16 1/2 DP	3.25
S300	9.50	16.50	11.00	12.00	5.50	1.38	.28	9.00	5.75	3.59	5/16 x 5/32	1.38	3.94	.50	6.25	(4)1/2-13 7/8 DP	(2)7/16 3/4 DP	4.75

* See corresponding “FD” unit drawings for housing mounting hole dimensions and dial mounting hole location

Indexer Ordering Procedure

1. Model
2. Input Shaft Configuration
   - Side 1
   - Side 2
   - Double Input – DI (Standard)
3. Cam Lead (Helix)
   - Right Hand (Standard)
   - Left Hand

NOTE: Input may rotate in either direction to achieve desired direction of output rotation.

4. Indexer Mounting Position: 1-6

Position of Shafts

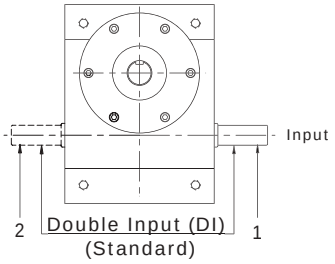

Cam Lead

Right Hand	Left Hand
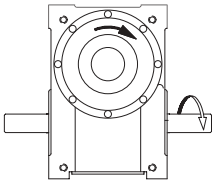	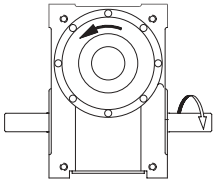

Indexer Mounting Position

1 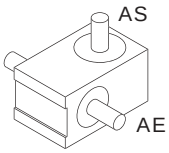	2 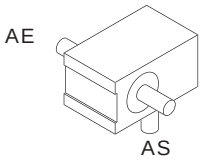
3 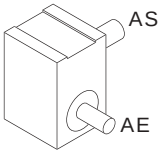	4 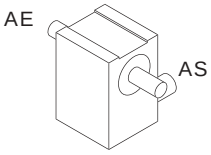
5 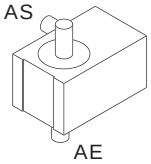	6 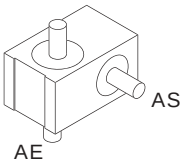
AE: Input Shaft	AS: Output Shaft

Reducer Ordering Procedure

1. Model
2. Ratio
   - 5:1, 10:1, 15:1, 20:1, 25:1, 30:1, 40:1, 50:1, 60:1
3. Motor Adapter
4. Reducer Input Shaft Extension
   - Single Input (SE) or Double Input (DE)
5. Mounting
   - Mounting Position A, B, C, or D
   - Mounted on Indexer Side 1 or Side 2
6. Input Shaft Orientation
   - Left or Right (See Diagram Below)

Reducer Mounting Position

A-1-RH 	B-1-RH 	B-1-LH 	A-1-LH 	C-1-RH 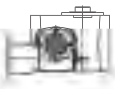	D-1-LH 	C-1-LH 	D-1-RH 
A-2-LH 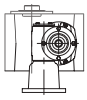	B-2-LH 	B-2-RH 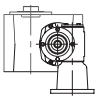	A-2-RH 	C-2-LH 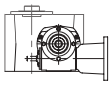	D-2-RH 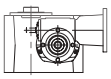	C-2-RH 	D-2-LH 

CAMCO Parallel Index Drives
Center Distance (Dimension "A")
Supplement to Catalog Section E

250P

Model	Center Distance "A"
250P1H20-300	3.250
250P1.5H20-270	3.250
250P2H20-270	3.250
250P2H20-180	3.250
250P3H20-270	2.750
250P3H20-180	2.750
250P3H20-120	3.250
250P4H20-270	2.750
250P4H20-180	2.750
250P4H20-120	3.250
250P4H20-90	3.250
250P6H20-270 II	2.750
250P6H24-180 II	2.750
250P8H20-270 II	2.750
250P8H20-180 II	2.750
250P8H20-120 II	3.250
250P12H20-270 II	2.750
250P12H20-180 II	2.750

387P

Model	Center Distance "A"
387P1H28-300	4.812
387P1.33H28-315	4.812
387P1.5H28-300	4.812
387P2H32-270	4.812
387P2H32-180	4.812
387P2.67H28-270 II	4.812
387P3H28-270	4.000
387P3H28-180	4.812
387P3H28-120	4.812
387P4H28-270	4.000
387P4H28-180	4.000
387P4H28-120	4.812
387P4H28-90	4.812
387P6H28-270 II	4.000
387P6H28-180 II	4.812
387P8H28-270 II	4.000
387P8H28-180 II	4.000
387P8H28-120 II	4.812
387P12H28-180 II	4.000
387P12H32-120 II	4.812

512P

Model	Center Distance "A"
512P1H48-330	5.979
512P1.33H48-330	5.979
512P1.5H48-330	5.979
512P2H40-270	5.979
512P2H40-180	5.979
512P2H40-120	5.979
512P2.67H40-300 II	5.979
512P3H40-270	4.858
512P3H40-180	5.979
512P4H40-270	4.858
512P4H40-180	4.858
512P4H40-120	5.979
512P6H40-270 II	4.858
512P6H40-180 II	5.979
512P8H40-270 II	4.858
512P8H40-180 II	5.979
512P10H40-180 II	5.979

662P

Model	Center Distance "A"
662P1H48-330	7.729
662P1.33H64-330	7.729
662P1.5H64-270	7.729
662P2H48-270	7.729
662P2H56-180	7.729
662P3H48-270	6.628
662P3H48-180	7.729
662P4H48-270	6.628
662P4H48-180	6.628
662P4H48-120	7.729
662P6H48-270 II	6.628
662P6H48-180 II	7.729
662P8H48-270 II	6.628
662P8H48-180 II	7.729
662P8H48-120	7.729
662P12H48-180 II	6.628

900P

Model	Center Distance "A"
900P1H72-330	10.500
900P1.33H96-300	10.500
900P1.5H72-330	10.500
900P2H72-270	10.500
900P2H72-180	10.500
900P3H72-270	8.531
900P3H72-180	10.500
900P4H72-270	8.531
900P4H72-180	8.531
900P4H72-120	10.500
900P6H72-270 II	8.531
900P6H72-180 II	10.500
900P8H72-270 II	8.531
900P8H72-180 II	10.500

1200P

Model	Center Distance "A"
1200P1H112-330	14.000
1200P1.33H112-330	14.000
1200P1.5H112-330	14.000
1200P2H96-270	14.000
1200P2H96-180	14.000
1200P3H96-270	14.000
1200P3H96-180	14.000
1200P4H96-270	11.375
1200P4H96-180	11.375
1200P4H96-120	14.000
1200P4H96-90	14.000
1200P6H96-270 II	11.375
1200P6H96-180 II	14.000
1200P8H96-270 II	11.375
1200P8H96-180 II	14.000
1200P8H96-120 II	14.000

Parallel Index Drives

IMC
INDUSTRIAL MOTION CONTROL, LLC.
CAMCO FERGUSON

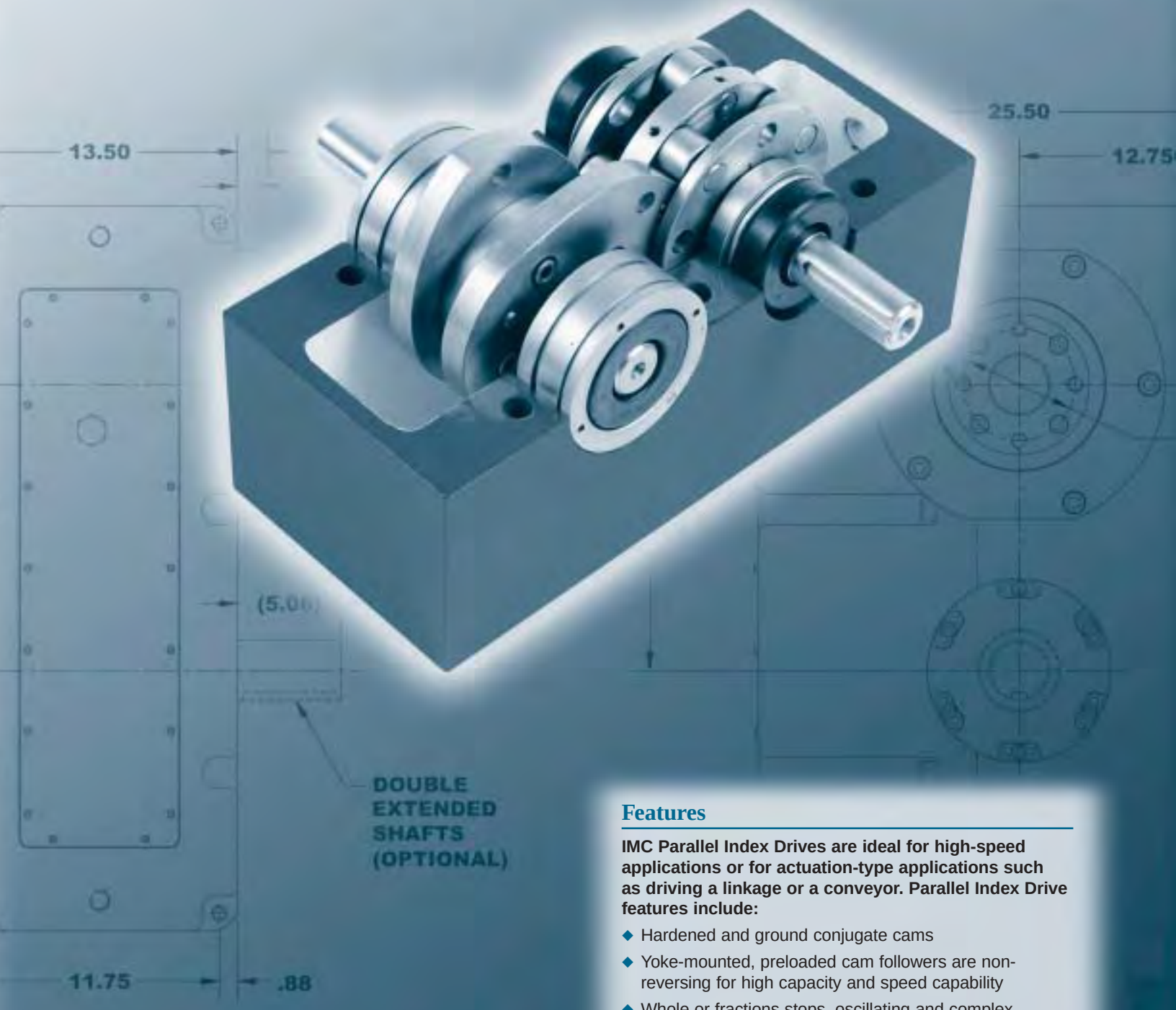

Features

IMC Parallel Index Drives are ideal for high-speed applications or for actuation-type applications such as driving a linkage or a conveyor. Parallel Index Drive features include:

- Hardened and ground conjugate cams
- Yoke-mounted, preloaded cam followers are non-reversing for high capacity and speed capability
- Whole or fractions stops, oscillating and complex custom motions are available
- Long Transfer Distances achieved with simple linkages.
- Preloaded, tapered roller bearings for rigidity and backlash-free operation.

E

250P

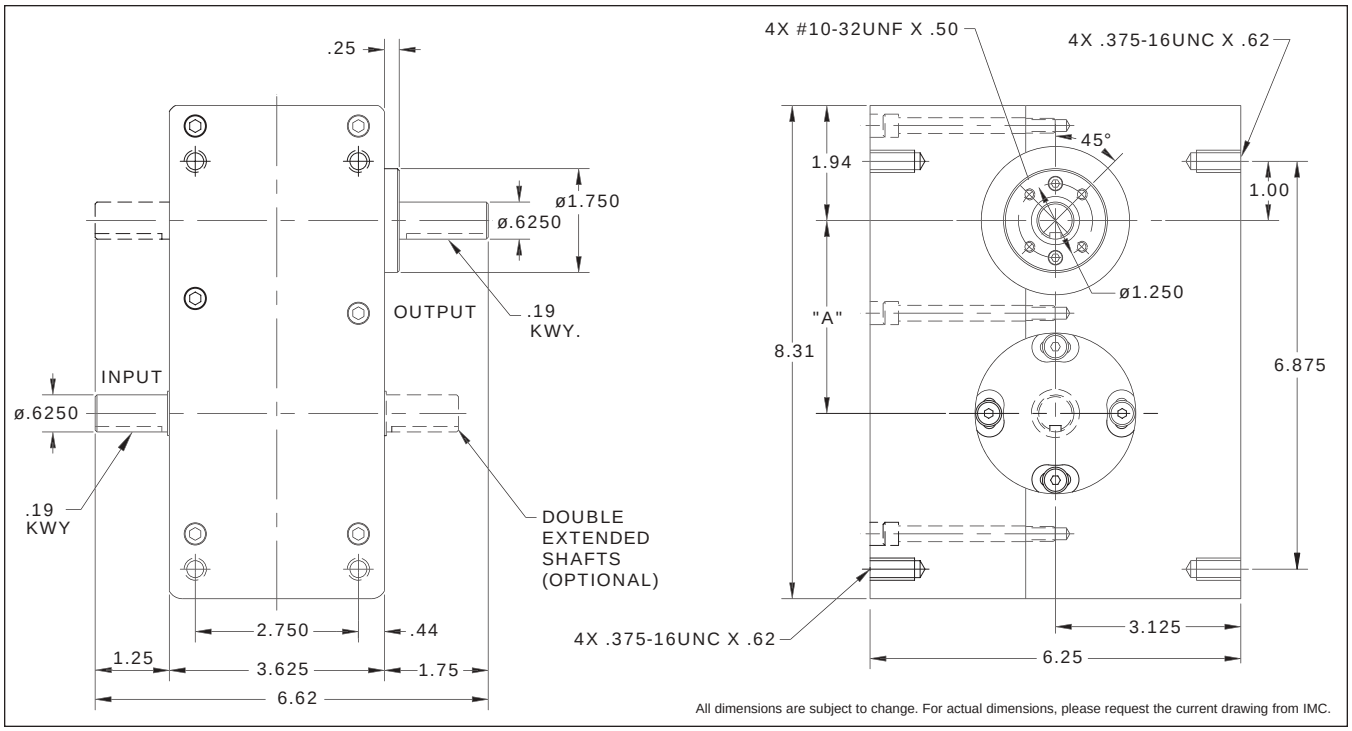

250P Indexer Capacities

Stops (S)	Index Period (β)	Motion	B_{10} Capacity at 50 RPM (in-lb)	Internal Inertia (lb-in²)	Model	"A" Center Distance (in.)
1.0	300	msc.50	444	3	250P1H20-300	3.250
1.5	270	msc.33	481	2	250P1.5H20-270	3.250
2	270	ms	433	3	250P2H20-270	3.250
	180	msc.33	546	3	250P2H20-180	3.250
3	270	ms	582	2	250P3H20-270	2.750
	180	ms	661	2	250P3H20-180	2.750
	120	ms	653	2	250P3H20-120	3.250
4	270	ms	571	3	250P4H20-270	2.750
	180	ms	664	3	250P4H20-180	2.750
	120	ms	666	3	250P4H20-120	3.250
	90	msc.25	782	3	250P4H20-90	3.250
6	270	ms	888	2	250P6H20-270 II	2.750
	180	msc.33	2078	3	250P6H24-180 II	2.750
8	270	ms	843	3	250P8H20-270 II	2.750
	180	ms	992	3	250P8H20-180 II	2.750
	120	ms	993	3	250P8H20-120 II	3.250
12	270	ms	702	2	250P12H20-270 II	2.750
	180	ms	827	2	250P12H20-180 II	2.750

Other Motions (stops and index periods) available. Contact your IMC sales representative for more information.

Technical Specifications

Output Load Capacity – loads carried during index

Radial	575 lbs
Thrust/Axial	314 lbs
Moment	719 in.-lbs

Accuracy	±77 arcsec / ±.001" at 3" Radius
Repeatability	±38 arcsec / ±.0006" at 3" Radius

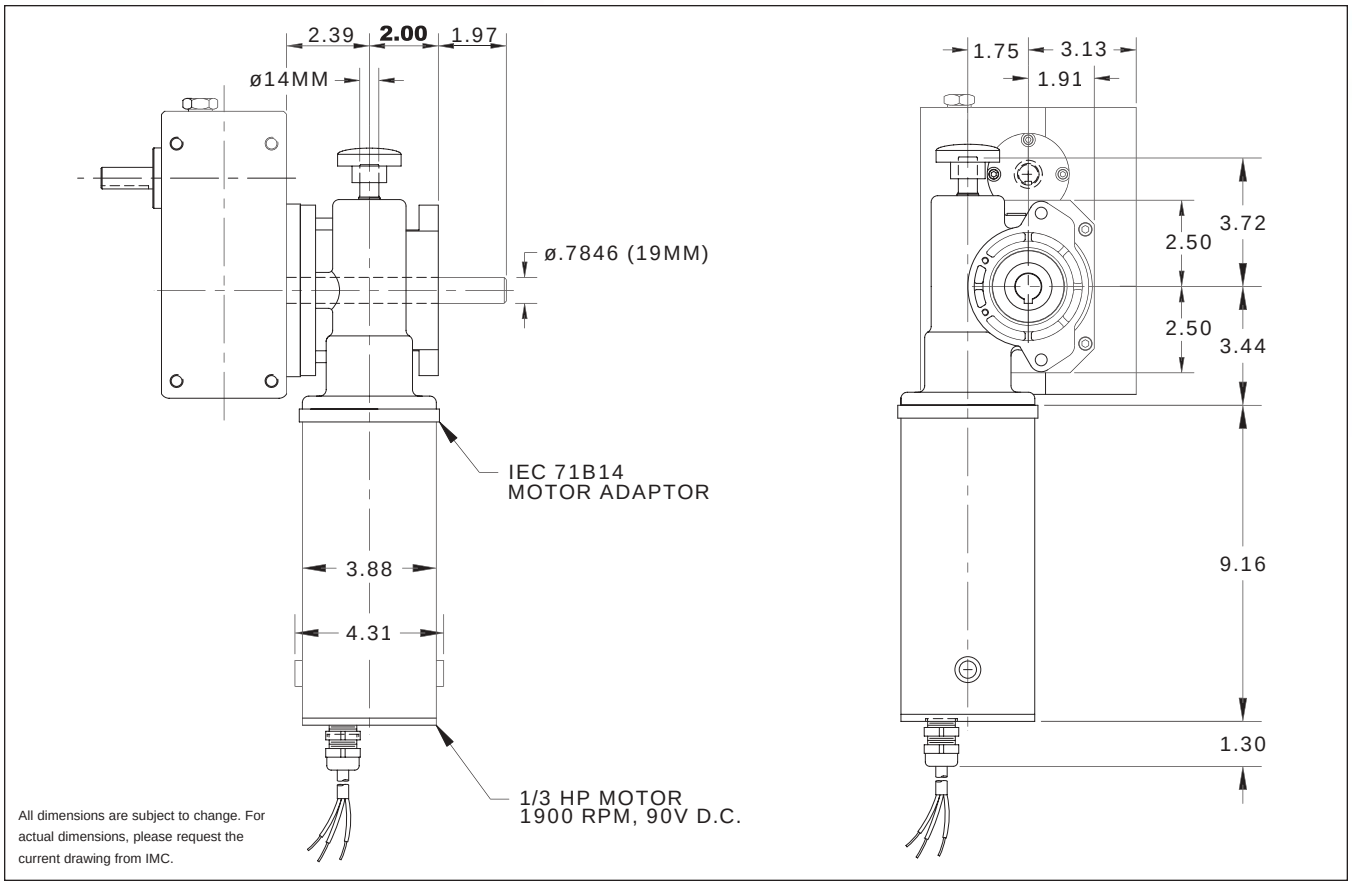

All dimensions are subject to change. For actual dimensions, please request the current drawing from IMC.

Standard Package

250P Indexer with

- Single Input Shaft and Single Output Shaft
- Output horizontal even with input Mounting
- R180 Reducer (ratios from 5:1 to 60:1)
  - Double Extended Worm (input) Shaft
  - Worm Shaft Handwheel
- 1/3 hp DC motor
- Varipak DC Motor Control (up to 30 cpm)
- Single Cycle Cam and Limit Switch

Accessories and Options

- 1/3 or 1 hp AC Drive Package with Inverter Duty Motor and Inverter Drive (up to 60 cpm)
- R225 Reducer (ratios from 5:1 to 60:1)
  - 1 hp AC or DC drive package
  - 56C Motor Adapter and Coupling
- Output Overload Clutch Models: .39F, .39FC, .39S and .39C, .39C-SD, .39FC-SD, .39S-SD
  - Available Settings (in-lb): 160, 210, 270, 320, 390
- Dual Cycle Cam and Limit Switch
- Electric Clutch-Brake
- Air Clutch-Brake (with R225 only)
- Oscillating motion
- Double Input Shaft
- Double Output Shaft
- Output and Input Vertical Mounting
- 180-IOC or 225-IOC Input Overload Clutch

387P

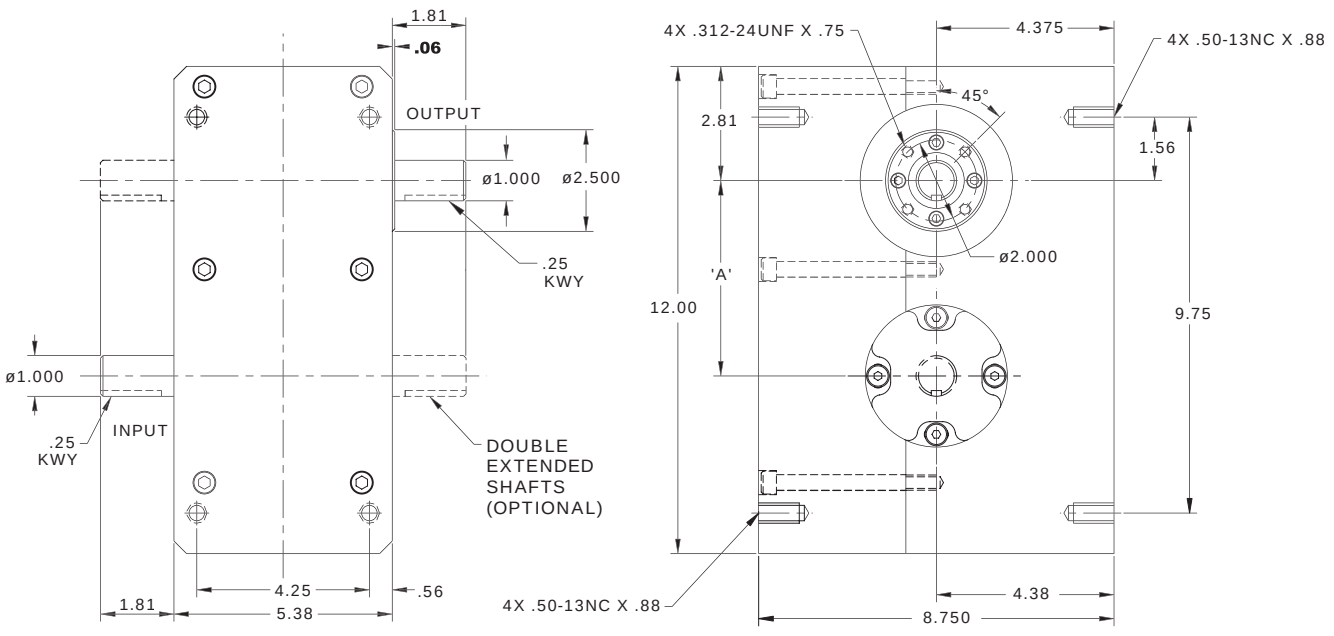

All dimensions are subject to change. For actual dimensions, please request the current drawing from IMC.

387P Indexer Capacities

Stops (S)	Index Period (β)	Motion	B_{10} Capacity at 50 RPM (in-lb)	Internal Inertia (lb-in²)	Model	"A" Center Distance (in.)
1	300	msc.66	1385	14	387P1H28-300	4.812
1.33	315	msc.10	1062	13	387P1.33H28-315	4.812
1.5	300	ms	1099	13	387P1.5H28-300	4.812
2	270	msc.33	1788	14	387P2H32-270	4.812
	180	msc.33	2095	14	387P2H32-180	4.812
2.67	270	msc.33	2171	14	387P2.67H28-270 II	4.812
3	270	ms	1601	13	387P3H28-270	4.000
	180	ms	1625	13	387P3H28-180	4.812
	120	msc.33	2067	14	387P3H28-120	4.812
4	270	ms	1605	14	387P4H28-270	4.000
	180	ms	1865	14	387P4H28-180	4.000
	120	ms	1835	14	387P4H28-120	4.812
	90	msc.33	2214	14	387P4H28-90	4.812
6	270	ms	2445	13	387P6H28-270 II	4.000
	180	ms	2463	13	387P6H28-180 II	4.812
8	270	ms	2378	14	387P8H28-270 II	4.000
	180	ms	2789	14	387P8H28-180 II	4.000
	120	ms	2730	14	387P8H28-120 II	4.812
12	180	ms	2378	14	387P12H28-180 II	4.000
	120	ms	4220	14	387P12H32-120 II	4.812

Other Motions (stops and index periods) available. Contact your IMC sales representative for more information.

Technical Specifications

Output Load Capacity – loads carried during index

Radial	1,627 lbs
Thrust/Axial	577 lbs
Moment	2,945 in.-lbs

Accuracy	±50 arcsec / ±.0007" at 3" Radius
Repeatability	±25 arcsec / ±.0004" at 3" Radius

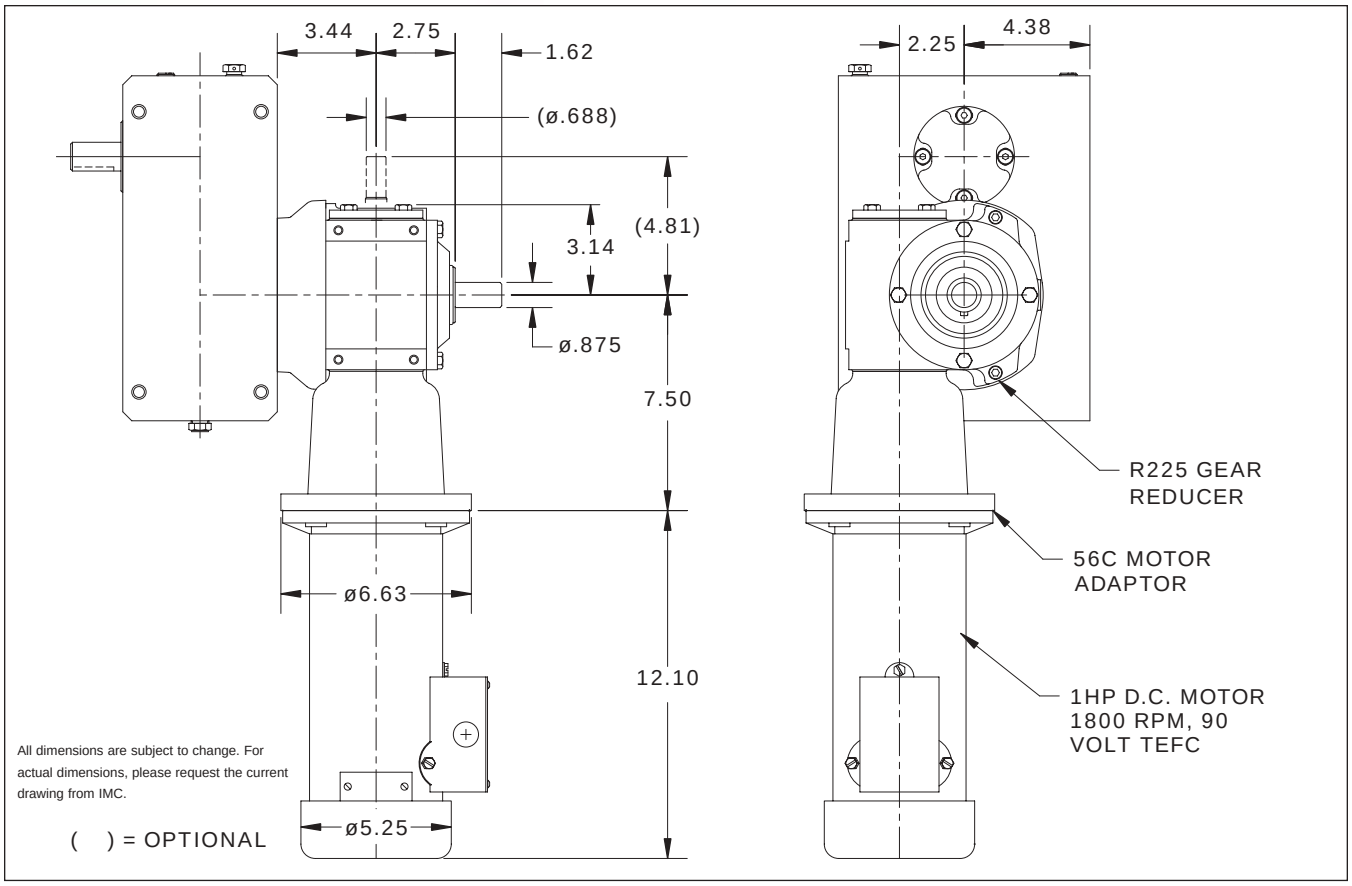

Standard Package

387P Indexer with

- Single Input Shaft and Single Output Shaft
- Output horizontal even with input Mounting
- R225 Reducer (ratios from 5:1 to 60:1)
  - 56C Motor Adapter and Coupling
- 1 hp DC motor
- Varipak DC Motor Control (up to 30 cpm)
- Single Cycle Cam and Limit Switch

Accessories and Options

- 1 hp AC Drive Package with Inverter Duty Motor and Inverter Drive (up to 60 cpm)
- R260 Reducer (ratios from 5:1 to 60:1)
  - 1 hp AC or DC drive package
  - 56C Motor Adapter and Coupling
- Output Overload Clutch Models: 2.3F, 2.3FC, 2.3S and 2.3C, 2.3C-SD, 2.3FC-SD, 2.3S-SD
  - Available Settings (in-lb): 400, 600, 700, 850, 1000, 1300, 1800, 2000, 2300
- Dual Cycle Cam and Limit Switch
- Electric Clutch-Brake
- Air Clutch-Brake
- Oscillating motion
- Double Input Shaft
- Double Output Shaft
- Output and Input Vertical Mounting
- 225-IOC or 260-IOC Input Overload Clutch

512P

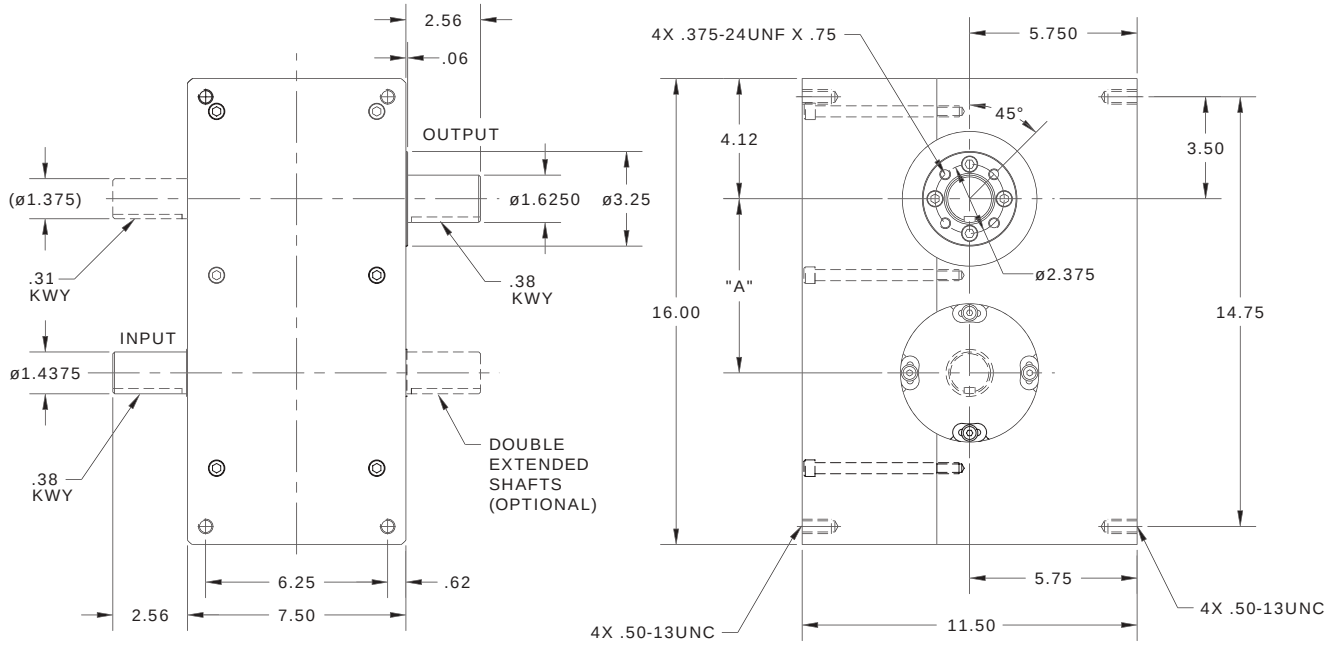

All dimensions are subject to change. For actual dimensions, please request the current drawing from IMC.

512P Indexer Capacities

Stops (S)	Index Period (β)	Motion	B_{10} Capacity at 50 RPM (in-lb)	Internal Inertia (lb-in²)	Model	"A" Center Distance (in.)
1	330	msc.75	6441	63	512P1H48-330	5.979
1.33	330	msc.33	4928	61	512P1.33H48-330	5.979
1.5	330	ms	4860	63	512P1.5H48-330	5.979
2	270	msc.33	4373	61	512P2H40-270	5.979
	180	msc.50	5416	61	512P2H40-180	5.979
	120	msc.50	4131	61	512P2H40-120	5.979
3	300	msc.33	7116	61	512P2.67H40-300 II	5.979
	270	ms	5425	56	512P3H40-270	4.858
	180	ms	5462	56	512P3H40-180	5.979
4	270	ms	5619	61	512P4H40-270	4.858
	180	ms	6494	61	512P4H40-180	4.858
	120	ms	6252	61	512P4H40-120	5.979
6	270	ms	8315	56	512P6H40-270 II	4.858
	180	ms	8261	56	512P6H40-180 II	5.979
8	270	ms	8387	61	512P8H40-270 II	4.858
	180	ms	7894	61	512P8H40-180 II	5.979
10	180	ms	7165	61	512P10H40-180 II	5.979

Other Motions (stops and index periods) available. Contact your IMC sales representative for more information.

Technical Specifications

Output Load Capacity – loads carried during index

Radial	4,937 lbs
Thrust/Axial	1,374 lbs
Moment	12,638 in.-lbs

Accuracy	±39 arcsec / ±.0006" at 3" Radius
Repeatability	±19 arcsec / ±.0003" at 3" Radius

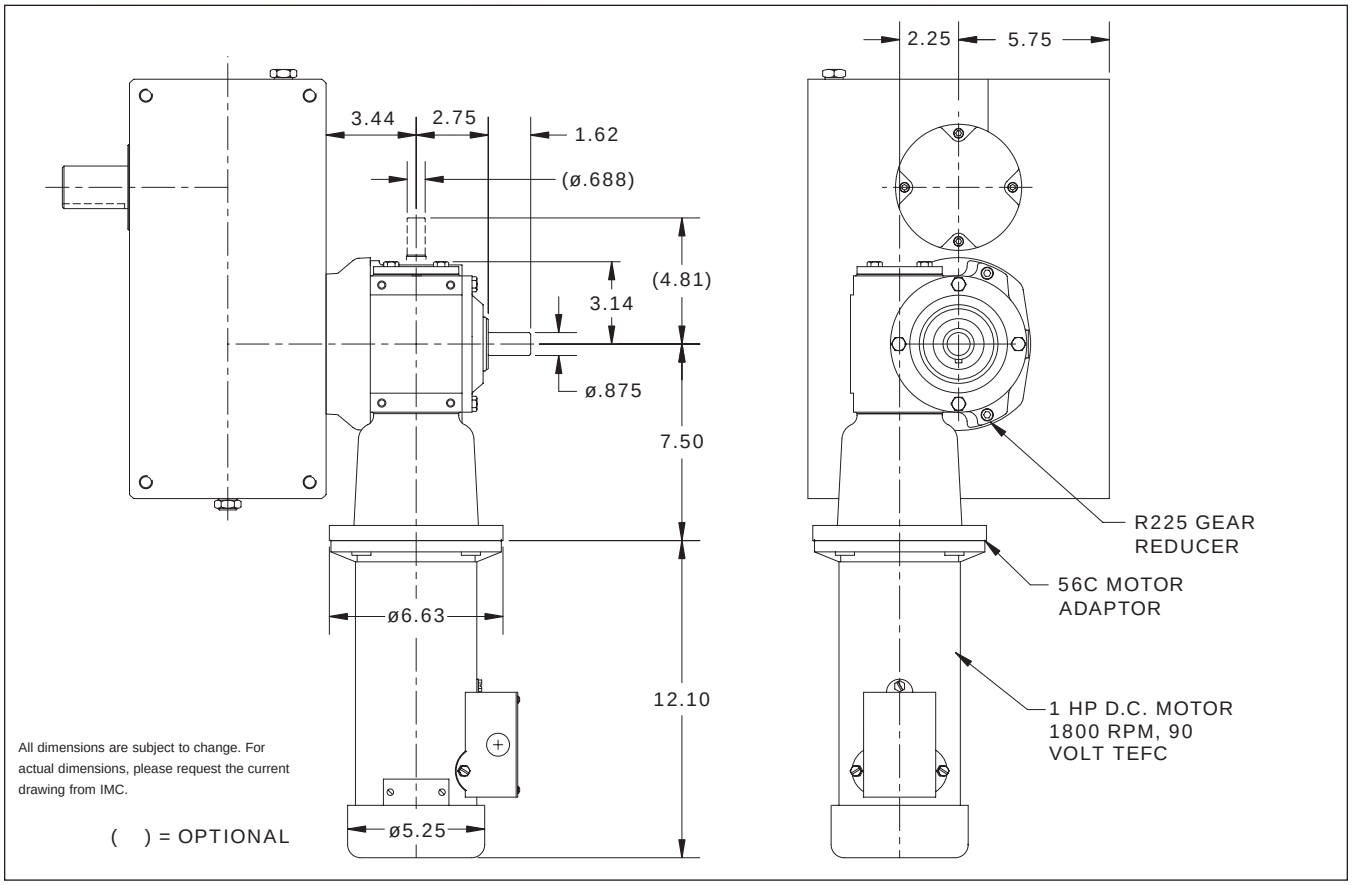

Standard Package

512P Indexer with

- Single Input Shaft and Single Output Shaft
- Output horizontal even with input Mounting
- R225 Reducer (ratios from 5:1 to 60:1)
  - 56C Motor Adapter and Coupling
- 1 hp DC motor
- Varipak DC Motor Control (up to 30 cpm)
- Single Cycle Cam and Limit Switch

Accessories and Options

- 1 hp AC Drive Package with Inverter Duty Motor and Inverter Drive (up to 60 cpm)
- R260 Reducer (ratios from 5:1 to 60:1)
  - 1 hp AC or DC drive package
  - 56C Motor Adapter and Coupling
- Output Overload Clutch Models: 6.0F, 6.0FC, 6.0S and 6.0C, 6.0C-SD, 6.0FC-SD, 6.0S-SD
  - Available Settings (in-lb): 670, 825, 1100, 1400, 1700, 2000, 2300, 2500, 3000, 3800, 4000, 5000, 6000
- Dual Cycle Cam and Limit Switch
- Electric Clutch-Brake
- Air Clutch-Brake
- Oscillating motion
- Double Input Shaft
- Double Output Shaft
- Output and Input Vertical Mounting
- 225-IOC or 260-IOC Input Overload Clutch

662P

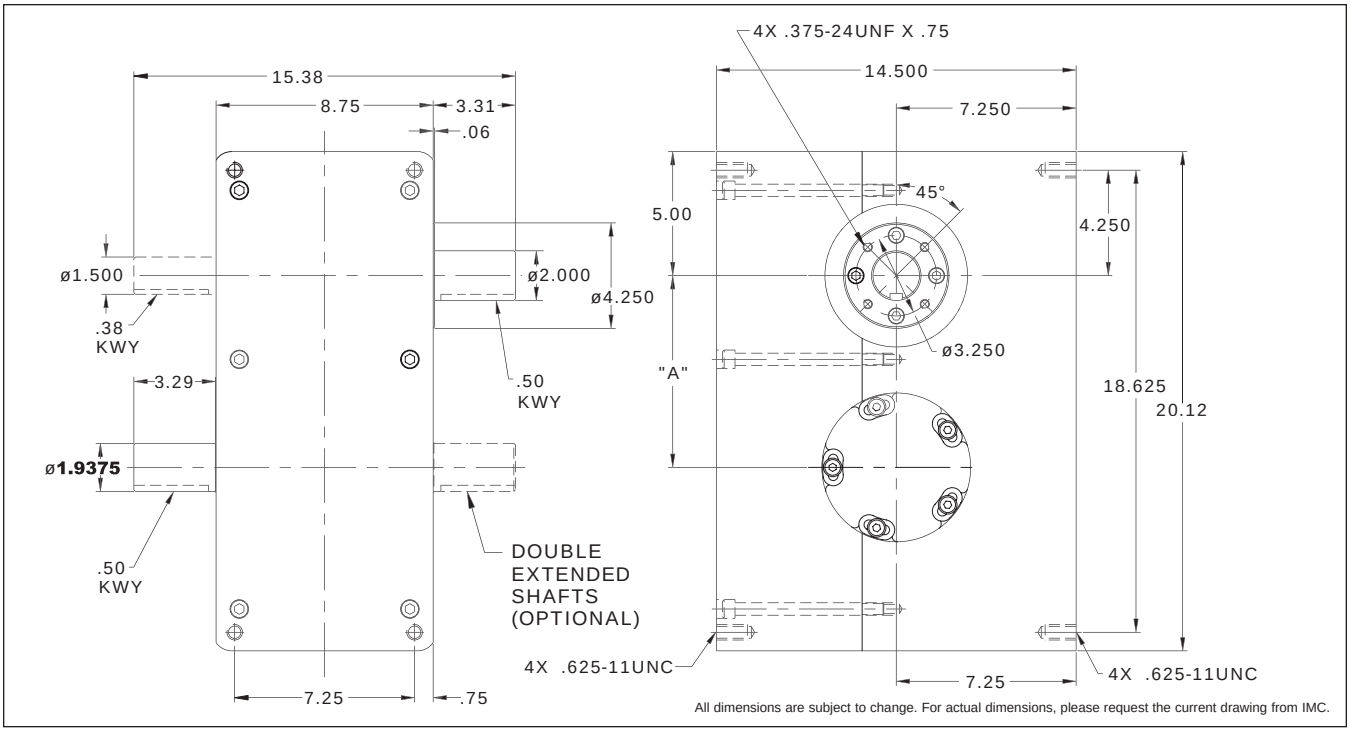

All dimensions are subject to change. For actual dimensions, please request the current drawing from IMC.

662P Indexer Capacities

Stops (S)	Index Period (β)	Motion	B_{10} Capacity at 50 RPM (in-lb)	Internal Inertia (lb-in²)	Model	"A" Center Distance (in.)
1	330	msc.50	5824	138	662P1H48-330	7.729
1.33	330	msc.20	10368	332	662P1.33H64-330	7.729
1.5	270	msc.33	12617	306	662P1.5H64-270	7.729
2	270	msc.33	6811	181	662P2H48-270	7.729
	180	msc.50	11760	204	662P2H56-180	7.729
3	270	ms	8446	166	662P3H48-270	6.628
	180	ms	8506	166	662P3H48-180	7.729
4	270	ms	8752	181	662P4H48-270	6.628
	180	ms	10118	181	662P4H48-180	6.628
	120	ms	9738	181	662P4H48-120	7.729
6	270	ms	12946	166	662P6H48-270 II	6.628
	180	ms	12863	166	662P6H48-180 II	7.729
8	270	ms	13060	181	662P8H48-270 II	6.628
	180	ms	12293	181	662P8H48-180 II	7.729
	120	msc.33	15780	181	662P8H48-120	7.729
12	180	ms	13552		662P12H48-180 II	6.628

Other Motions (stops and index periods) available. Contact your IMC sales representative for more information.

Technical Specifications

Output Load Capacity – loads carried during index

Radial	7,118 lbs
Thrust/Axial	2,042 lbs
Moment	23,562 in.-lbs

Accuracy	±35 arcsec / ±.001" at 6" Radius
Repeatability	±18 arcsec / ±.0005" at 6" Radius

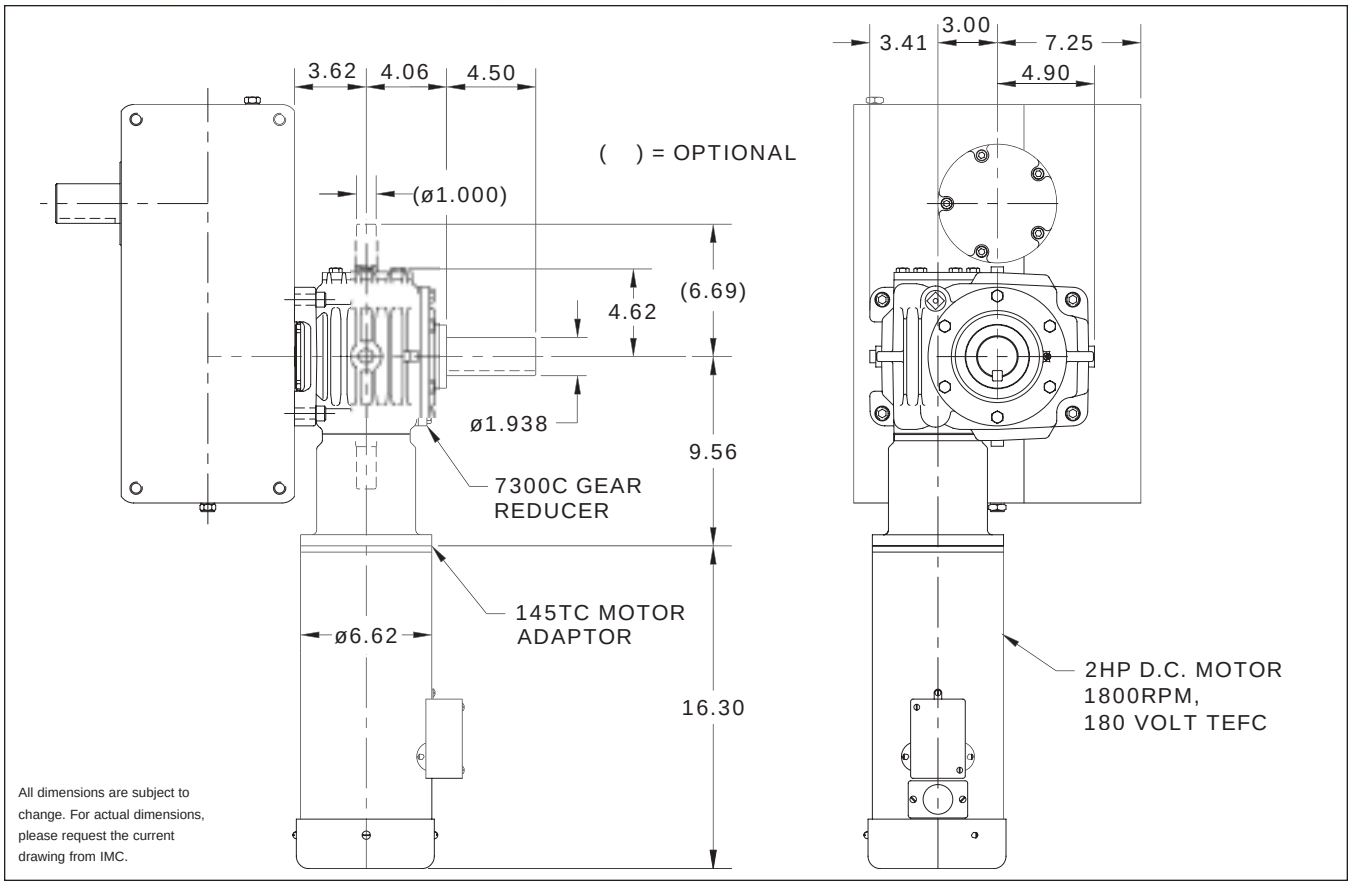

Standard Package

662P Indexer with

- Single Input Shaft and Single Output Shaft
- Output horizontal even with input Mounting
- 7300C Reducer (ratios from 5:1 to 60:1)
  - Motor Adapter and Coupling
- 2 hp DC motor
- Varipak DC Motor Control (up to 30 cpm)
- Single Cycle Cam and Limit Switch

Accessories and Options

- 1 or 2 hp AC Drive Package with Inverter Duty Motor and Inverter Drive (up to 60 cpm)
- 7350C or 7400C Reducer (ratios from 5:1 to 60:1) with Motor Adapter and Coupling
- 1 hp DC Motor
- Output Overload Clutch Models: 11F, 11FC, 11FC-SD
  - Available Settings (in-lb): 2300, 4000, 6000, 8500, 11000
- Dual Cycle Cam and Limit Switch
- Electric Clutch-Brake
- Air Clutch-Brake
- Oscillating motion
- Double Input Shaft
- Double Output Shaft
- Output and Input Vertical Mounting
- 300-IOC or 350-IOC Input Overload Clutch

900P

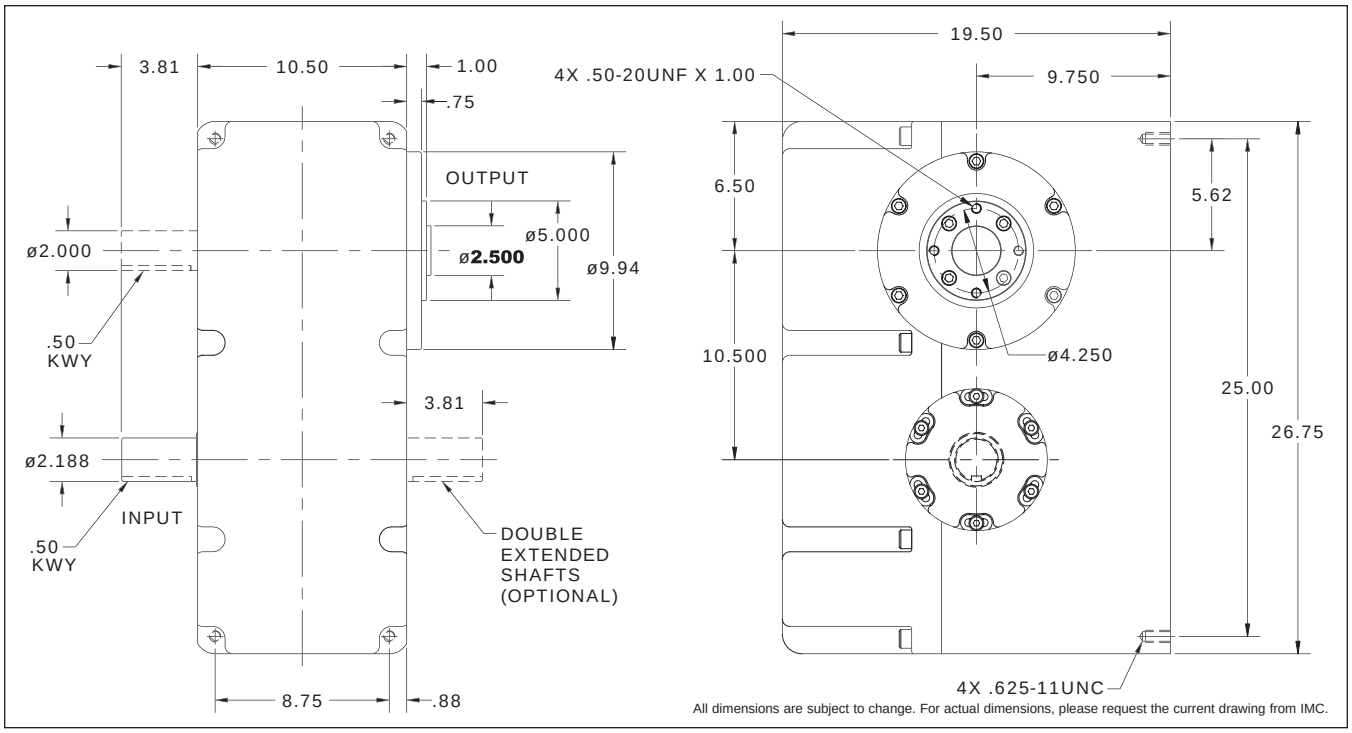

900P Indexer Capacities

Stops (S)	Index Period (β)	Motion	B_{10} Capacity at 50 RPM (in-lb)	Internal Inertia (lb-in²)	Model	"A" Center Distance (in.)
1	330	msc.50	20204	760	900P1H72-330	10.500
1.33	300	msc.33	32444	1375	900P1.33H96-300	10.500
1.5	330	ms	19950	677	900P1.5H72-330	10.500
2	270	msc.33	23507	760	900P2H72-270	10.500
	180	msc.50	29121	760	900P2H72-180	10.500
3	270	ms	29210	676	900P3H72-270	8.531
	180	ms	29383	676	900P3H72-180	10.500
4	270	ms	30195	760	900P4H72-270	8.531
	180	ms	34917	760	900P4H72-180	8.531
	120	ms	33614	760	900P4H72-120	10.500
6	270	ms	44661	676	900P6H72-270 II	8.531
	180	ms	44381	676	900P6H72-180 II	10.500
8	270	ms	45053	760	900P8H72-270 II	8.531
	180	ms	42408	760	900P8H72-180 II	10.500

Other Motions (stops and index periods) available. Contact your IMC sales representative for more information.

Technical Specifications

Output Load Capacity – loads carried during index

Radial	7,752 lbs
Thrust/Axial	4,036 lbs
Moment	21,318 in.-lbs

Accuracy	±27 arcsec / ±.0008" at 6" Radius
Repeatability	±13 arcsec / ±.0004" at 6" Radius

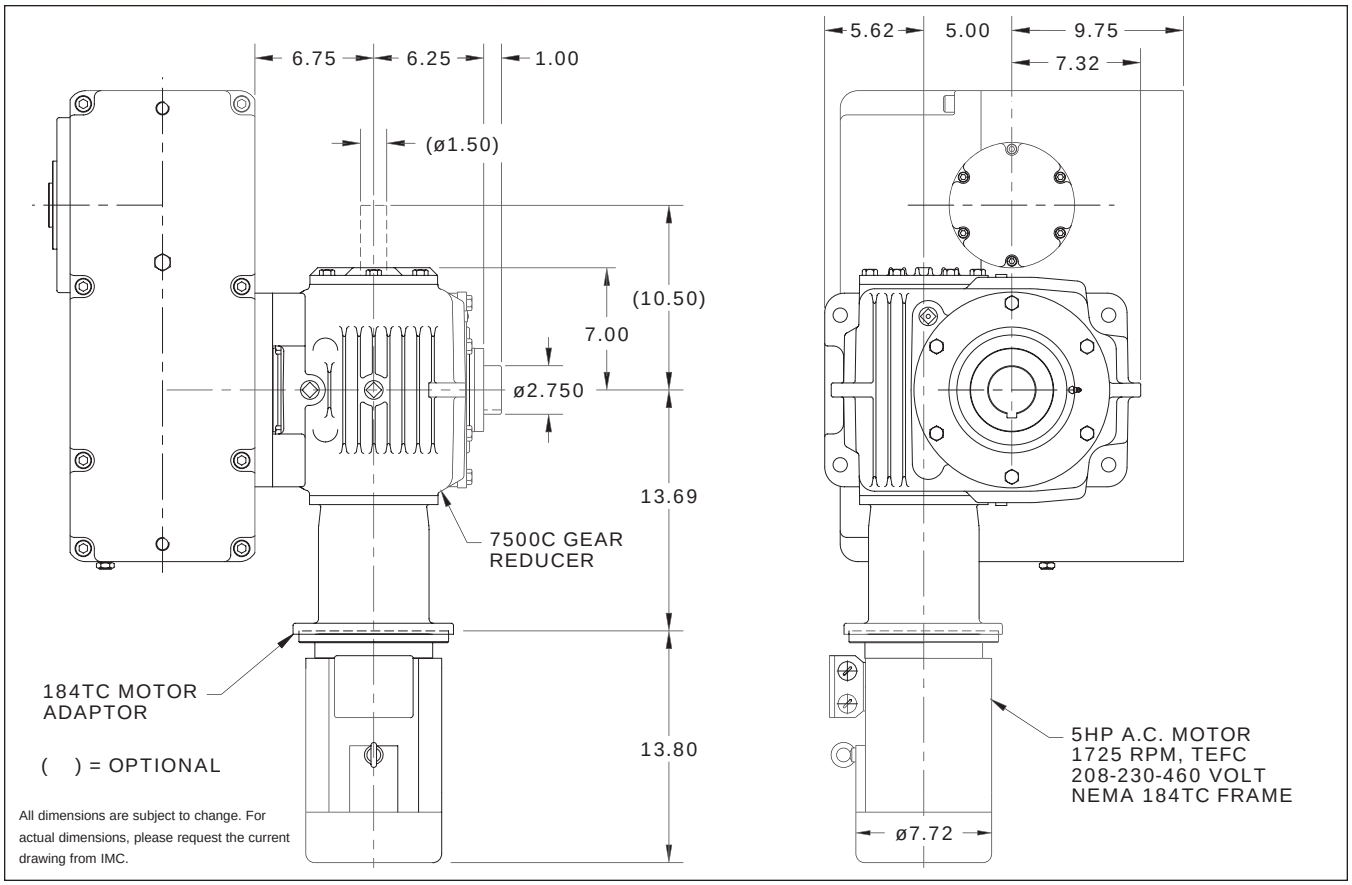

Standard Package

900P Indexer with

- Single Input Shaft and Single Output Flange
- Output horizontal even with input Mounting
- 7500C Reducer (ratios from 5:1 to 60:1)
  - Motor Adapter and Coupling
- 5 hp AC motor with AC Inverter Drive
- Single Cycle Cam and Limit Switch

Accessories and Options

- 7600C Reducer (ratios from 5:1 to 60:1) with Motor Adapter and Coupling
- Output Overload Clutch Models: 25F, 25FC, 25FC-SD
  - Available Settings (in-lbs): 5000, 7000, 10000, 13000, 15000, 20000, 25000
- Dual Cycle Cam and Limit Switch
- Electric Clutch-Brake
- Air Clutch-Brake
- 500-IOC or 600-IOC Input Overload Clutch
- Oscillating motion
- Double Input Shaft
- Double Output Shaft
- Output and Input Vertical Mounting

1200P

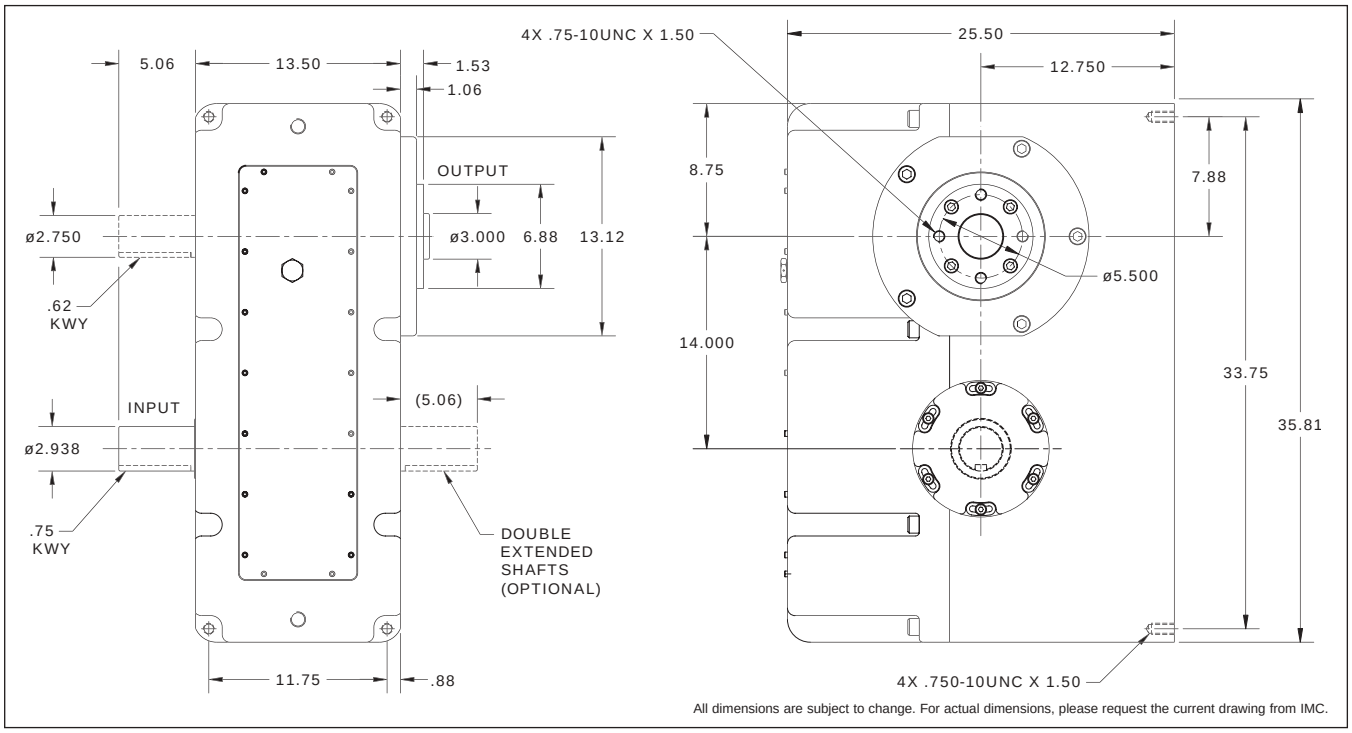

All dimensions are subject to change. For actual dimensions, please request the current drawing from IMC.

1200P Indexer Capacities

Stops (S)	Index Period (β)	Motion	B_{10} Capacity at 50 RPM (in-lb)	Internal Inertia (lb-in²)	Model	"A" Center Distance (in.)
1	330	msc.67	65256	2750	1200P1H112-330	14.000
1.33	330	msc.33	54336	3160	1200P1.33H112-330	14.000
1.5	330	ms	53245	2750	1200P1.5H112-330	14.000
2	270	msc.33	48376	2733	1200P2H96-270	14.000
	180	msc.50	59931	2733	1200P2H96-180	14.000
3	270	ms	52475	2209	1200P3H96-270	14.000
	180	ms	60331	2209	1200P3H96-180	14.000
4	270	ms	62136	2733	1200P4H96-270	11.375
	180	ms	71862	2733	1200P4H96-180	11.375
	120	ms	69180	2733	1200P4H96-120	14.000
	90	ms	65585	2733	1200P4H96-90	14.000
6	270	ms	91896	2209	1200P6H96-270 II	11.375
	180	ms	91323	2209	1200P6H96-180 II	14.000
8	270	ms	92706	2733	1200P8H96-270 II	11.375
	180	ms	87266	2733	1200P8H96-180 II	14.000
	120	msc.33	96303	2733	1200P8H96-120 II	14.000

Other Motions (stops and index periods) available. Contact your IMC sales representative for more information.

Technical Specifications

Output Load Capacity – loads carried during index

Radial	11,709 lbs
Thrust/Axial	8,822 lbs
Moment	40,250 in.-lbs

Accuracy	±20 arcsec / ±.0006" at 6" Radius
Repeatability	±10 arcsec / ±.0003" at 6" Radius

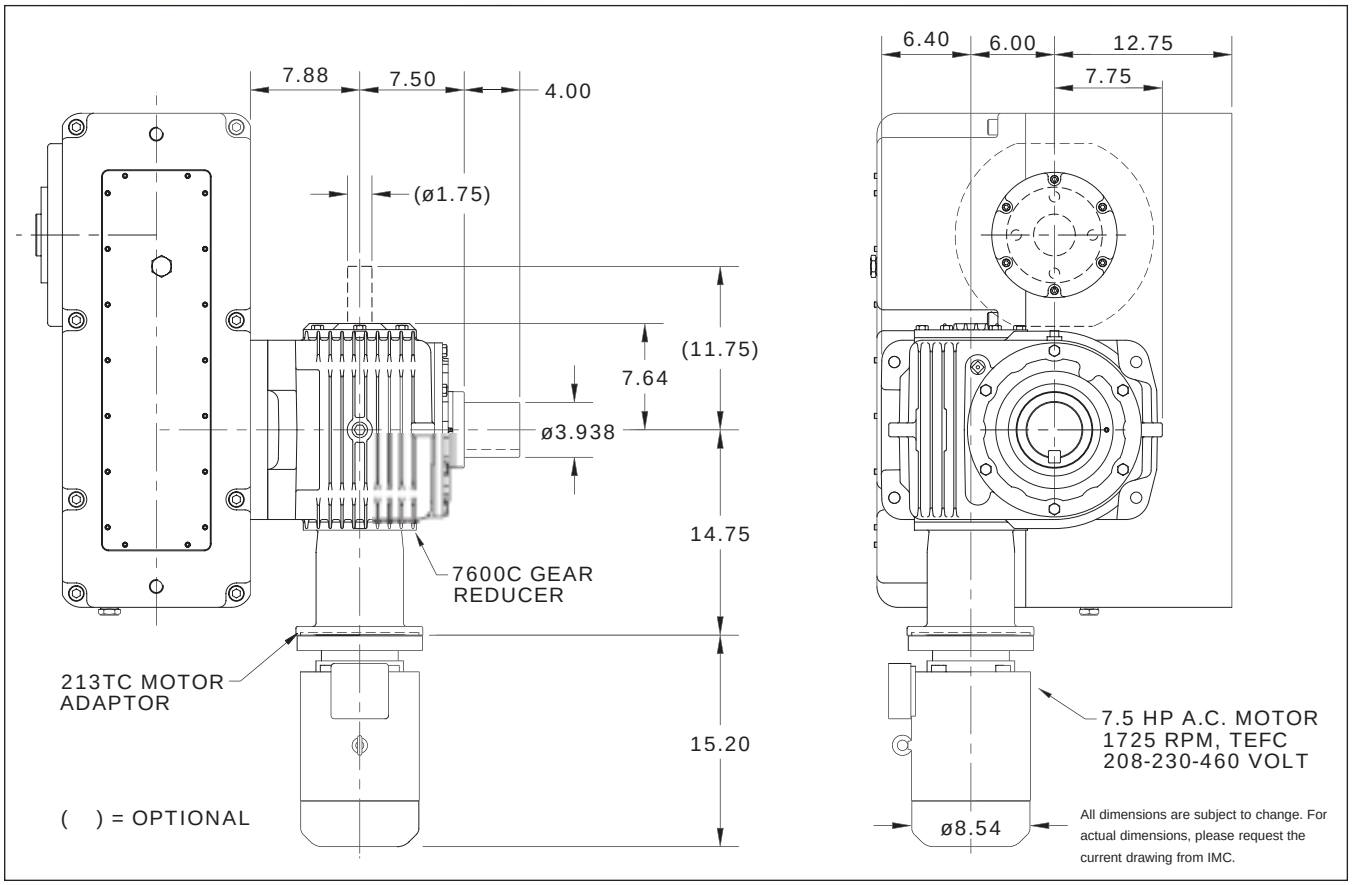

Standard Package

1200P Indexer with

- Single Input Shaft and Single Output Flange
- Output horizontal even with input Mounting
- 7600C Reducer (ratios from 5:1 to 60:1)
  - Motor Adapter and Coupling
- 7.5 hp AC Motor and AC Inverter Drive
- Single Cycle Cam and Limit Switch

Accessories and Options

- Output Overload Clutch Models: 41F, 41FC, 41FC-SD
  - Available Settings (in-lbs): 13000, 21000, 30000, 41000
- Dual Cycle Cam and Limit Switch
- Electric Clutch-Brake
- Air Clutch-Brake
- 600-IOC Input Overload Clutch
- Oscillating motion
- Double Input Shaft
- Double Output Shaft
- Output and Input Vertical Mounting

P325

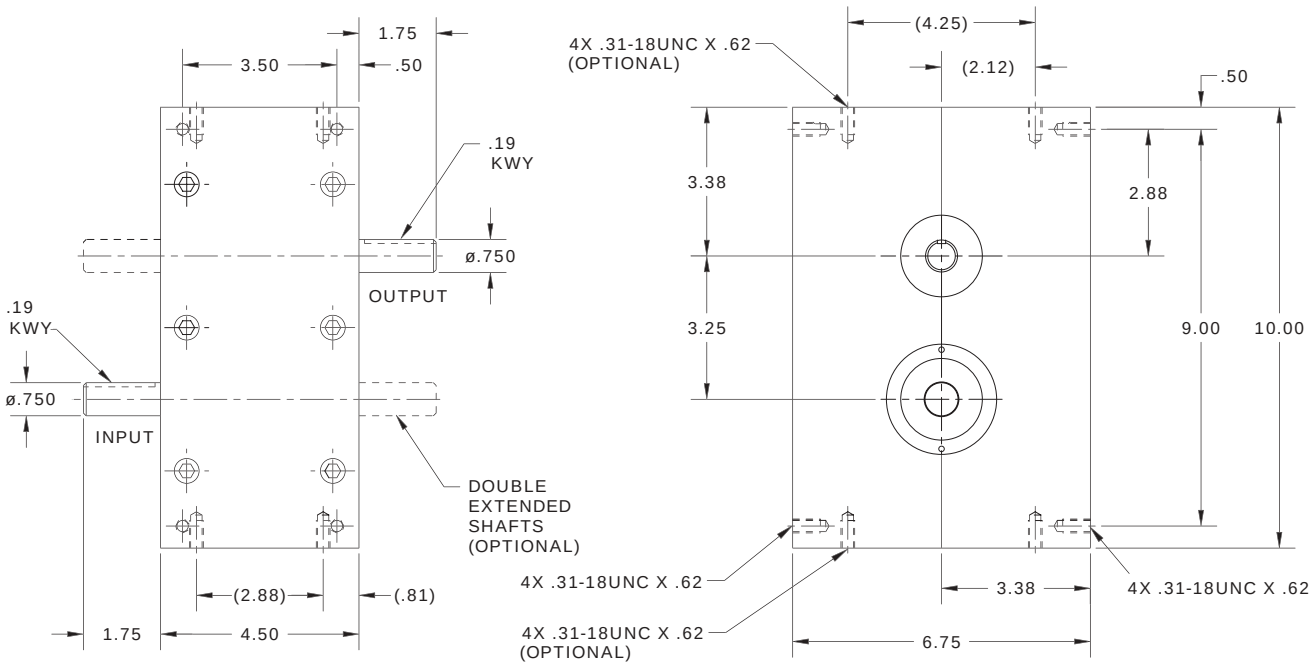

All dimensions are subject to change. For actual dimensions, please request the current drawing from IMC.

P325 Indexer Capacities

Stops (S)	Index Period (β)	Motion	B_{10} Capacity at 50 RPM (in-lb)	Internal Inertia (lb-in²)	Model
1	330	msc.50	817	3	P325-8/8-FY75-330
2	270	ms	854	3	P325-8/4-FY75-270
	180	msc.30	1007	3	P325-8/4-FY75-180
3	270	ms	980	3	P325-6/2-FY75-270
	180	ms	1081	3	P325-6/2-FY75-180
4	270	ms	949	3	P325-8/2-FY75-270
	180	ms	1075	3	P325-8/2-FY75-180
	120	ms	1195	3	P325-8/2-FY75-120
	90	msc.30	1315	3	P325-8/2-FY75-90
6	270	ms	1204	3	P325-6-FY75-135/135
	180	ms	1336	3	P325-6-FY75-90/90
8	270	ms	1026	3	P325-8-FY75-135/135
	180	ms	1169	3	P325-8-FY75-90/90
	120	ms	1313	3	P325-8-FY75-60/60

Other Motions (stops and index periods) available. Contact your IMC sales representative for more information.

Technical Specifications

Output Load Capacity – loads carried during index

Radial	710 lbs
Thrust/Axial	35 lbs
Moment	1,243 in.-lbs

Accuracy	±73 arcsec / ±.001" at 3" Radius
Repeatability	±38 arcsec / ±.0004" at 3" Radius

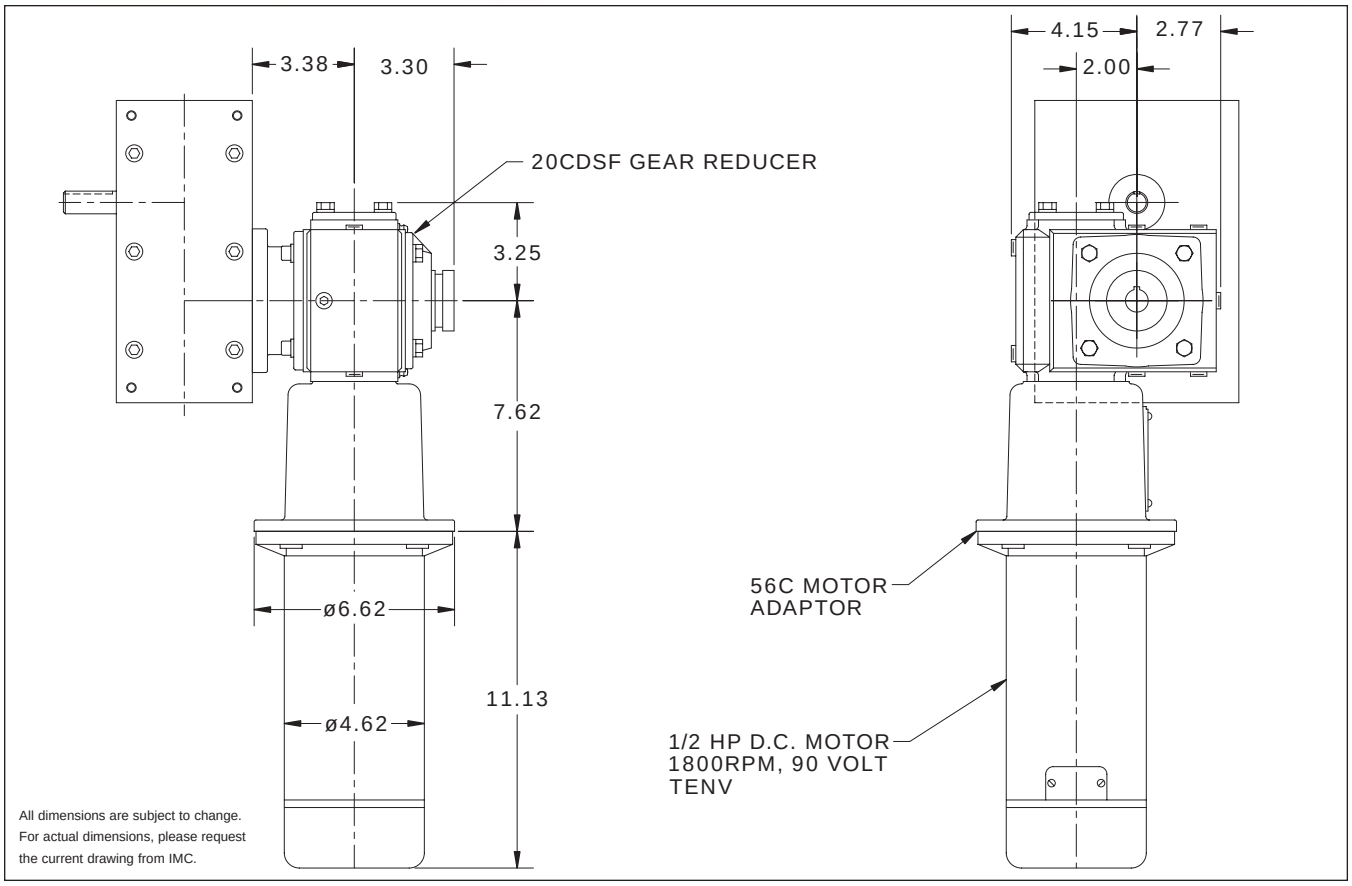

Standard Package

P325 Indexer with

- Single Input Shaft and Single Output Shaft
- Output horizontal even with input Mounting
- 20CDSF Reducer (ratios from 5:1 to 60:1)
  - 56C Motor Adapter and Coupling
- 1/2 hp DC motor
- Varipak DC Motor Control (up to 30 cpm)
- Single Cycle Cam and Limit Switch

Accessories and Options

- 1/2 hp AC Drive Package with Inverter Duty Motor and Inverter Drive (up to 60 cpm)
- Output Overload Clutch Models: RT3 S/S, RT3 S/F
  - Available Settings, Adjustable Ranges (in-lb): 100-175, 175-275, 250-350, 325-500
- Dual Cycle Cam and Limit Switch
- Electric Clutch-Brake
- Oscillating motion
- Double Input Shaft
- Double Output Shaft
- Output and Input Vertical Mounting

P500

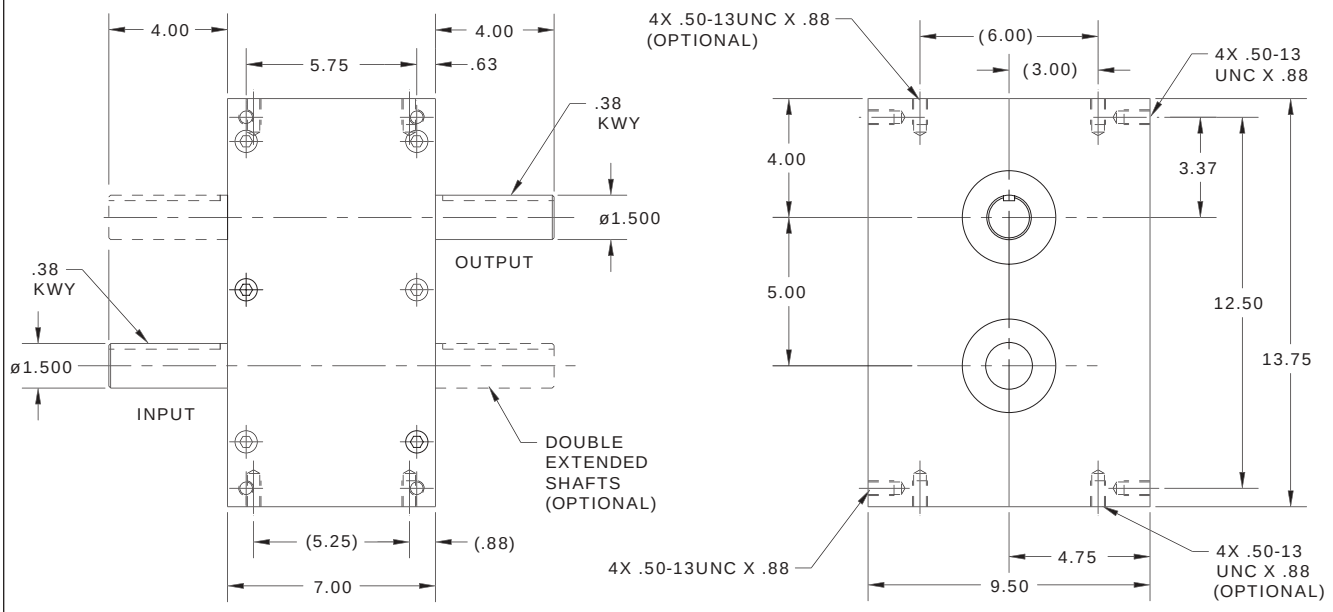

All dimensions are subject to change. For actual dimensions, please request the current drawing from IMC.

P500 Indexer Capacities

Stops (S)	Index Period (β)	Motion	B_{10} Capacity at 50 RPM (in-lb)	Internal Inertia (lb-in²)	Model
1	330	msc.50	3975	65	P50000-8/8-FY150-330
2	270	ms	4153	69	P500-8/4-FY150-270
	180	msc.20	4893	69	P500-8/4-FY150-180
3	270	ms	4759	65	P500-6/2-FY150-270
	180	ms	5252	65	P500-6/2-FY150-180
4	270	ms	4605	69	P500-8/2-FY150-270
	180	ms	5226	69	P500-8/2-FY150-180
	120	ms	5828	69	P500-8/2-FY150-120
	90	msc.30	6397	69	P500-8/2-FY150-90
6	270	ms	5847	65	P500-6-FY150-135/135
	180	ms	6485	65	P500-6-FY150-90/90
	150	msc.30	10045	65	P50000-6-FY150-150
8	270	ms	4984	69	P500-8-FY150-135/135
	180	ms	5672	69	P500-8-FY150-90/90
	120	ms	6371	69	P500-8-FY150-60/60

Other Motions (stops and index periods) available. Contact your IMC sales representative for more information.

Technical Specifications

Output Load Capacity – loads carried during index

Radial	2,485 lbs
Thrust/Axial	129 lbs
Moment	9,940 in.-lbs

Accuracy	±50 arcsec / ±.0007" at 3" Radius
Repeatability	±24 arcsec / ±.0003" at 3" Radius

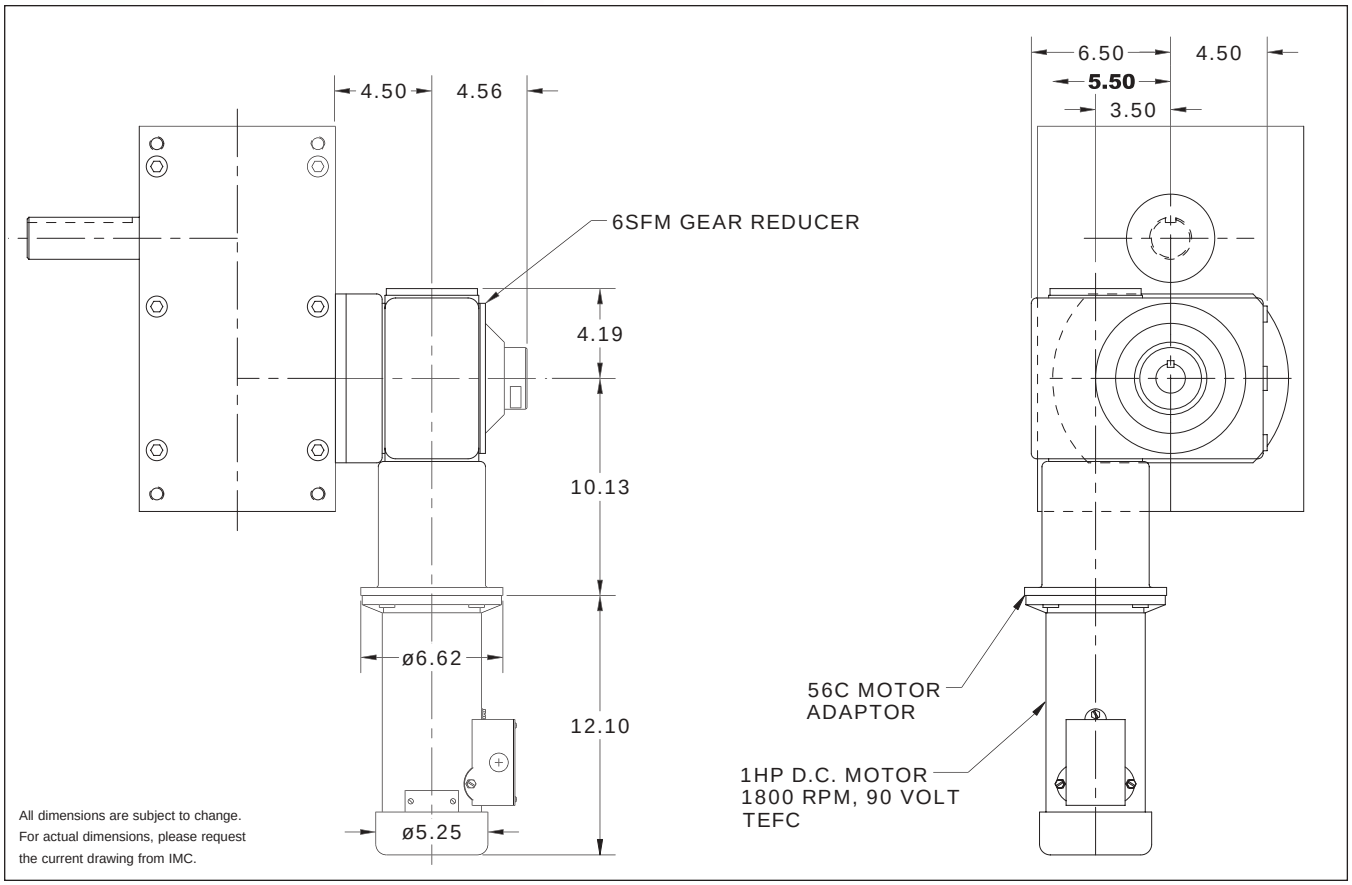

Standard Package

P500 Indexer with

- Single Input Shaft and Single Output Shaft
- Output horizontal even with input Mounting
- 6SFM Reducer (ratios from 5:1 to 60:1)
  - 56C Motor Adapter and Coupling
- 1 hp DC motor
- Varipak DC Motor Control (up to 30 cpm)
- Single Cycle Cam and Limit Switch

Accessories and Options

- 1 or 1.5 hp AC Drive Package with Inverter Duty Motor and Inverter Drive (up to 60 cpm)
- Output Overload Clutch Models: RT6 S/S, RT6 S/F
  - Available Settings, Adjustable Ranges (in-lb): 1000-2700, 2500-5000, 4000-8500
- Dual Cycle Cam and Limit Switch
- Electric Clutch-Brake
- Air Clutch-Brake
- Oscillating motion
- Double Input Shaft
- Double Output Shaft
- Output and Input Vertical Mounting

E

Indexer Ordering Procedure

1. Input Assembly: Right, Left or Double (DE)
2. Output Assembly: Right, Left or Double (DE).
   - Flanged output is primary output. For Double Output, specify whether flanged output is on right or left side.

NOTE: Input may rotate in either direction to achieve desired direction of output rotation.

3. Mounting Position: 1-6

Position of Shafts (Top View)

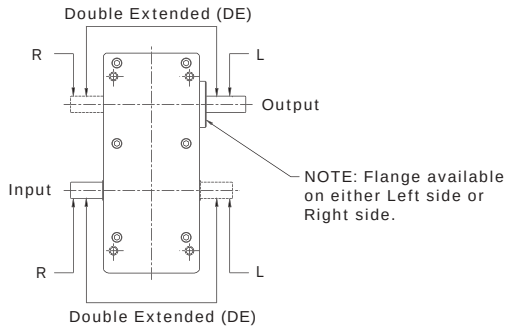

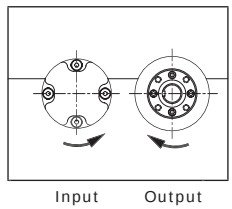

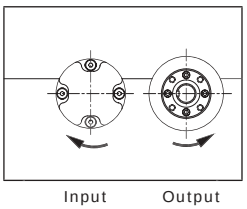

Indexer Mounting Position

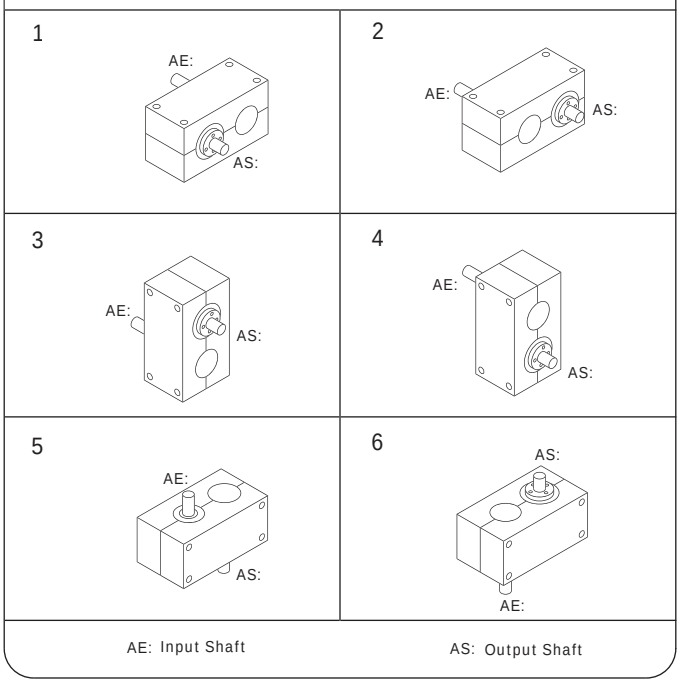

Reducer Ordering Procedure

1. Model
2. Ratio: 5:1, 10:1, 15:1, 20:1, 25:1, 30:1, 40:1, 50:1, 60:1
3. Motor Adapter
4. Reducer Input Shaft Extension: Single Input (SE) or Double Input (DE)
5. Mounting (see diagram below)

Reducer Mounting Position

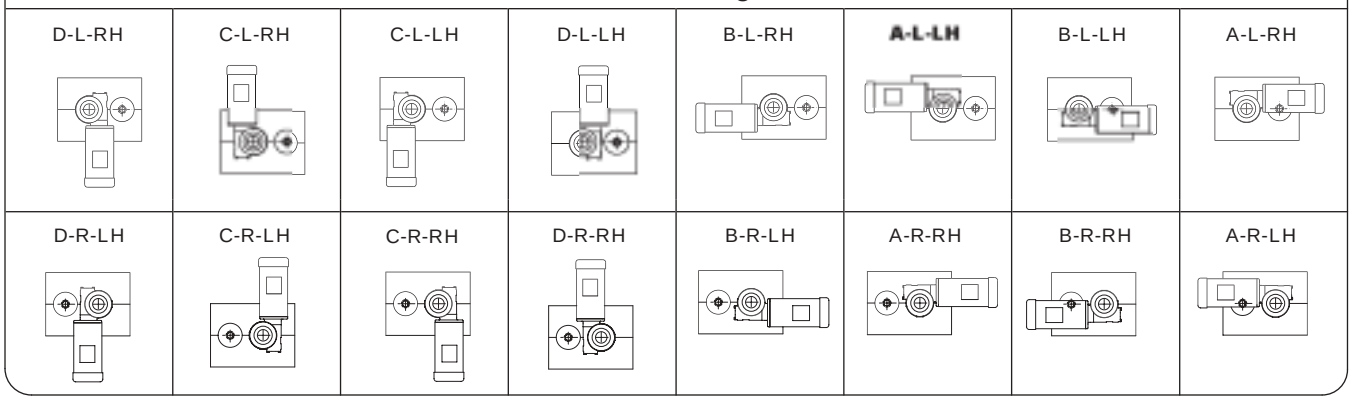

Right Angle Index Drives

IMC
INDUSTRIAL MOTION CONTROL, LLC.
CAMCO FERGUSON

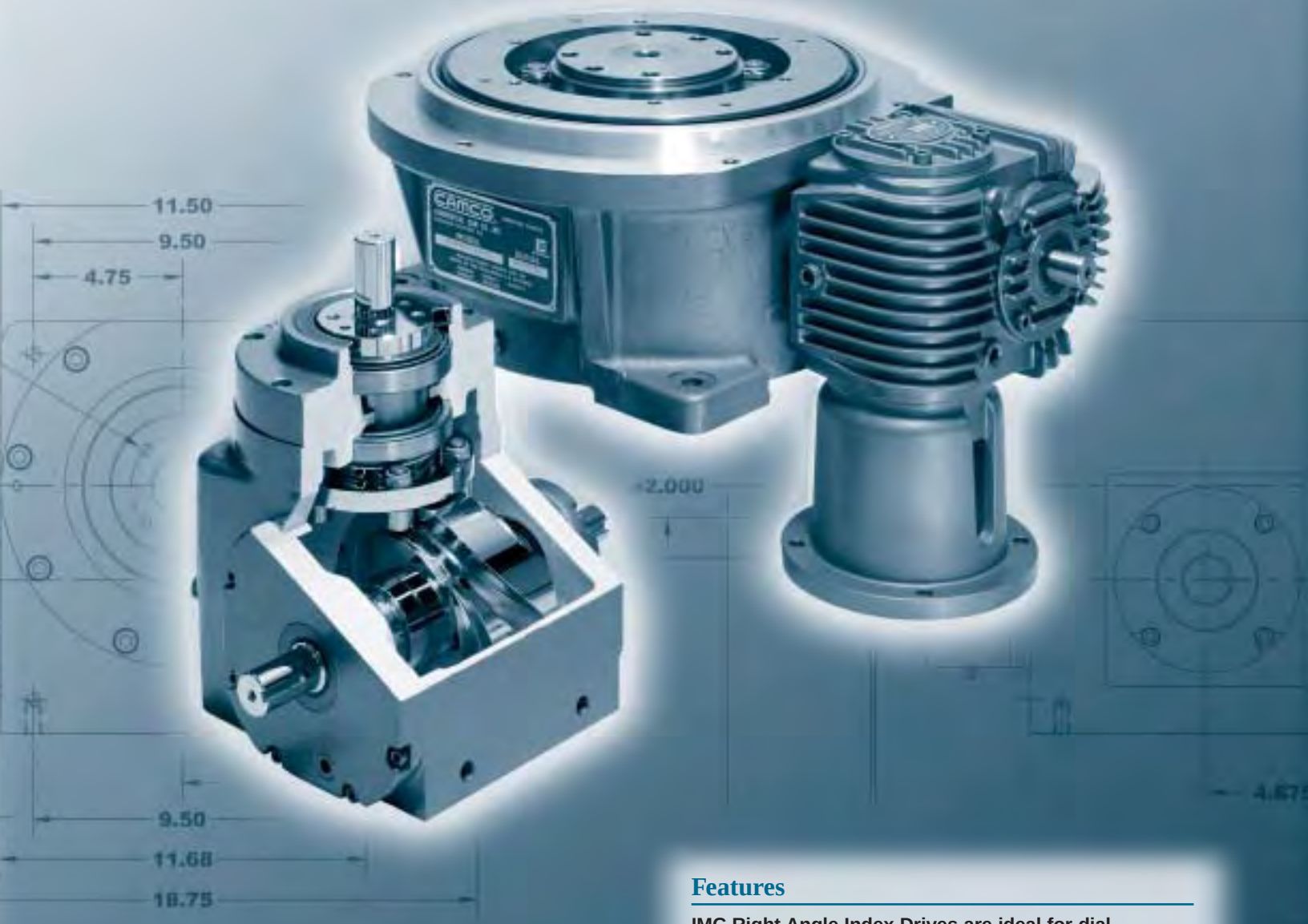

Features

IMC Right Angle Index Drives are ideal for dial applications or actuation-type applications such as driving a linkage or in-line conveyor. Right Angle Index Drives feature:

- Fixed Center Distance between input and output
- Hardened, ground barrel cam
- Flanged-Shaft or Dial Output
- Compact Design requiring minimum use of floor space.
- Preloaded “rib-centered” design with Modified Sine motion provides smooth acceleration and deceleration with precision positioning.
- Universal mounting available on RA models.
- Center Thru-Hole in RAD models facilitates passage of electrical wiring, pneumatic lines or mechanical linkages.

301RA

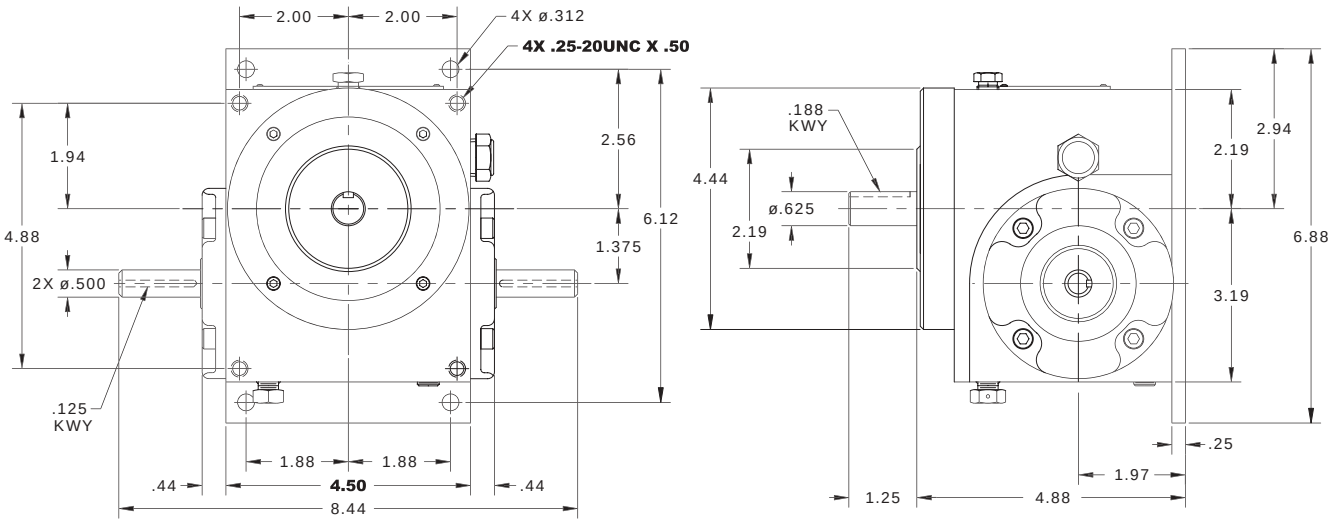

All dimensions are subject to change. For actual dimensions, please request the current drawing from IMC.

301RA Indexer Capacities

Stops (S)	Index Period (β)	Motion	B_{10} Capacity at 50 RPM (in-lb)	Internal Inertia (lb-in²)	Model
3	270	ms	276	2	301RA3H14-270
	180	msc.33	331	2	301RA3H14-180 MSC.33
4	270	ms	326	2	301RA4H14-270
	180	msc.33	412	2	301RA4H14-180 MSC.33
6	270	ms	351	2	301RA6H14-270
	180	ms	382	2	301RA6H14-180
	120	ms	390	2	301RA6H14-120
8	270	ms	438	2	301RA8H14-270
	180	ms	473	2	301RA8H14-180
	120	ms	481	2	301RA8H14-120
12	270	ms	538	3	301RA12H14-270
	180	ms	597	3	301RA12H14-180
16	270	ms	546	2	301RA16H14-270 II
	180	ms	576	2	301RA16H14-180 II
	120	ms	220	2	301RA16H14-120 II
24	270	ms	632	3	301RA24H14-270 II
	180	ms	705	3	301RA24H14-180 II
	120	ms	773	3	301RA24H14-120 II

Other Motions (stops and index periods) available. Contact your IMC sales representative for more information.

Technical Specifications

Output Load Capacity – loads carried during index

Radial	575 lbs
Thrust/Axial	577 lbs
Moment	719 in.-lbs

Accuracy	±67 arcsec / ±.0010" at 3" Radius
Repeatability	±33 arcsec / ±.0005" at 3" Radius

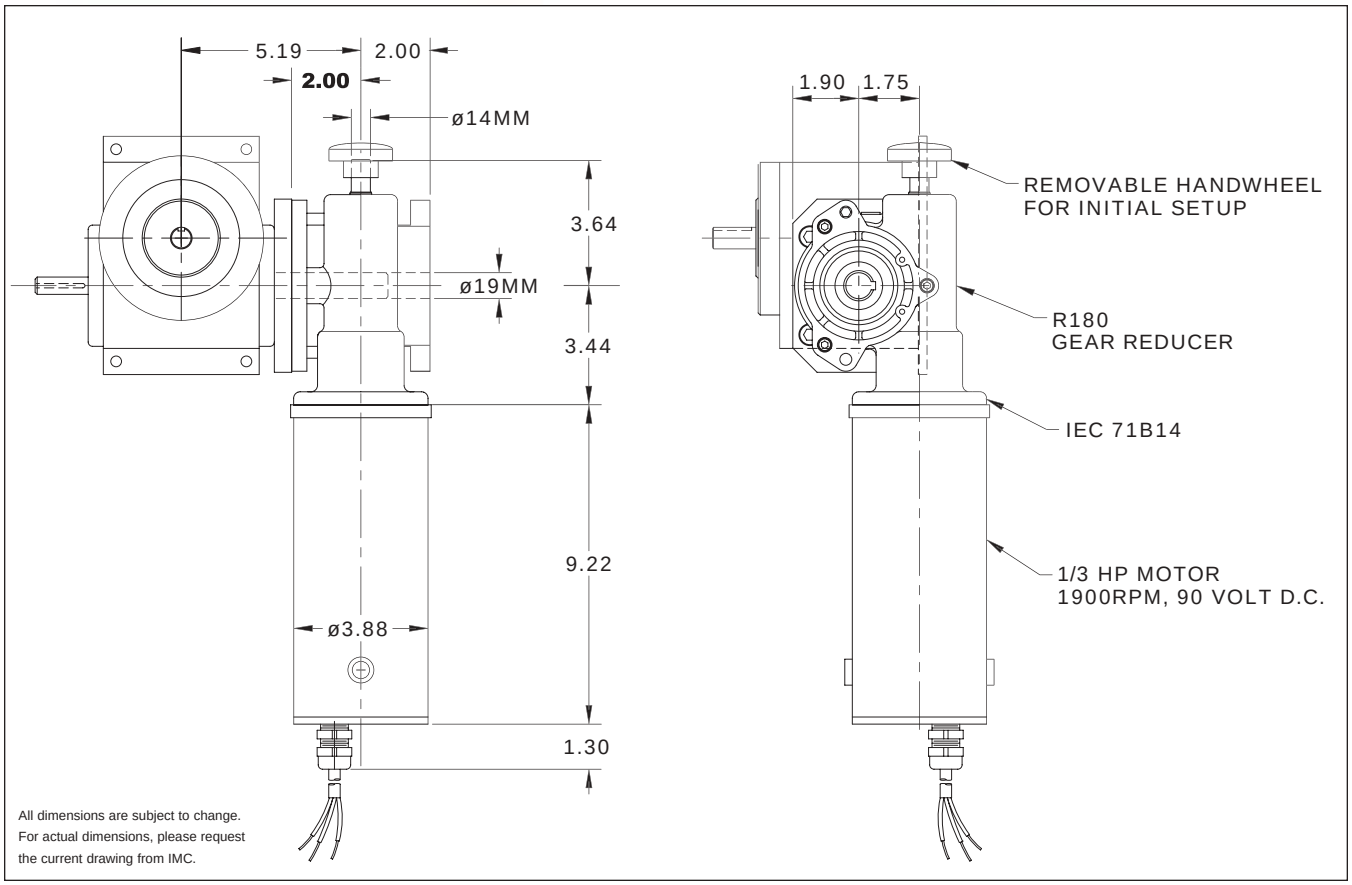

Standard Package

301RA with

- R180 Reducer (ratios from 5:1 to 60:1)
  - Double Extended Worm Shaft (Input)
  - Worm Shaft Handwheel
- Double Extended Camshaft (Input Shaft)
- 1/3 hp DC motor
- Varipak DC Motor Control (up to 30 cpm)
- Cycle Cam and Limit Switch Mounted to Camshaft
- Right Hand Cam

Accessories and Options

- 1/3 or 1 hp AC Drive Package with Inverter Duty Motor and Inverter Drive (up to 60 cpm)
- Output Overload Clutch Models: .39F, .39FC, .39S, .39C, .39FC-SD, .39S-SD, .39C-SD
  - Available Settings (in-lb): 160, 210, 270, 320, 390
- Dual Cycle Cam and Limit Switch
- Finished cover for ceiling mount or tooling plate mounting
- Electric Clutch-Brake
- Left Hand Cam
- Relief in Dwell for shot-pin applications

400RA

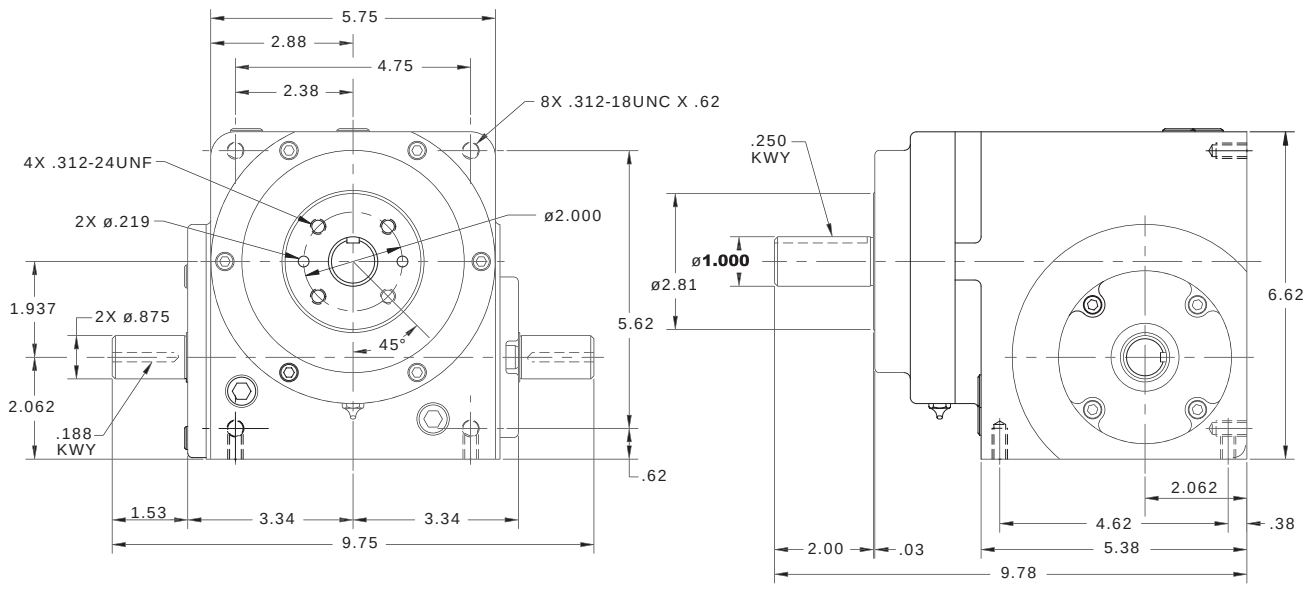

All dimensions are subject to change. For actual dimensions, please request the current drawing from IMC.

400RA Indexer Capacities

Stops (S)	Index Period (β)	Motion	B_{10} Capacity at 50 RPM (in-lb)	Internal Inertia (lb-in²)	Model
2	330	ms	595	15	400RA2H20-330
3	270	ms	1591	15	400RA3H24-270
4	270	ms	1858	15	400RA4H24-270
	180	ms	2098	15	400RA4H24-180
6	270	ms	1711	15	400RA6H24-270
	180	ms	1906	15	400RA6H24-180
	120	ms	2024	15	400RA6H24-120
8	270	ms	1987	15	400RA8H24-270
	180	ms	2194	15	400RA8H24-180
	120	ms	2354	15	400RA8H24-120
12	270	ms	1290	15	400RA12H20-270
	180	ms	1438	15	400RA12H20-180
	120	ms	1568	15	400RA12H20-120
16	270	ms	1426	15	400RA16H20-270 II
	180	ms	2947	15	400RA16H24-180 II
24	270	ms	1640	15	400RA24H20-270 II
	180	ms	1894	15	400RA24H20-180 II

Other Motions (stops and index periods) available. Contact your IMC sales representative for more information.

Technical Specifications

Output Load Capacity – loads carried during index

Radial	1473 lbs
Thrust/Axial	1406 lbs
Moment	2945 in.-lbs

Accuracy	±48 arcsec / ±.0007" at 3" Radius
Repeatability	±24 arcsec / ±.0003" at 3" Radius

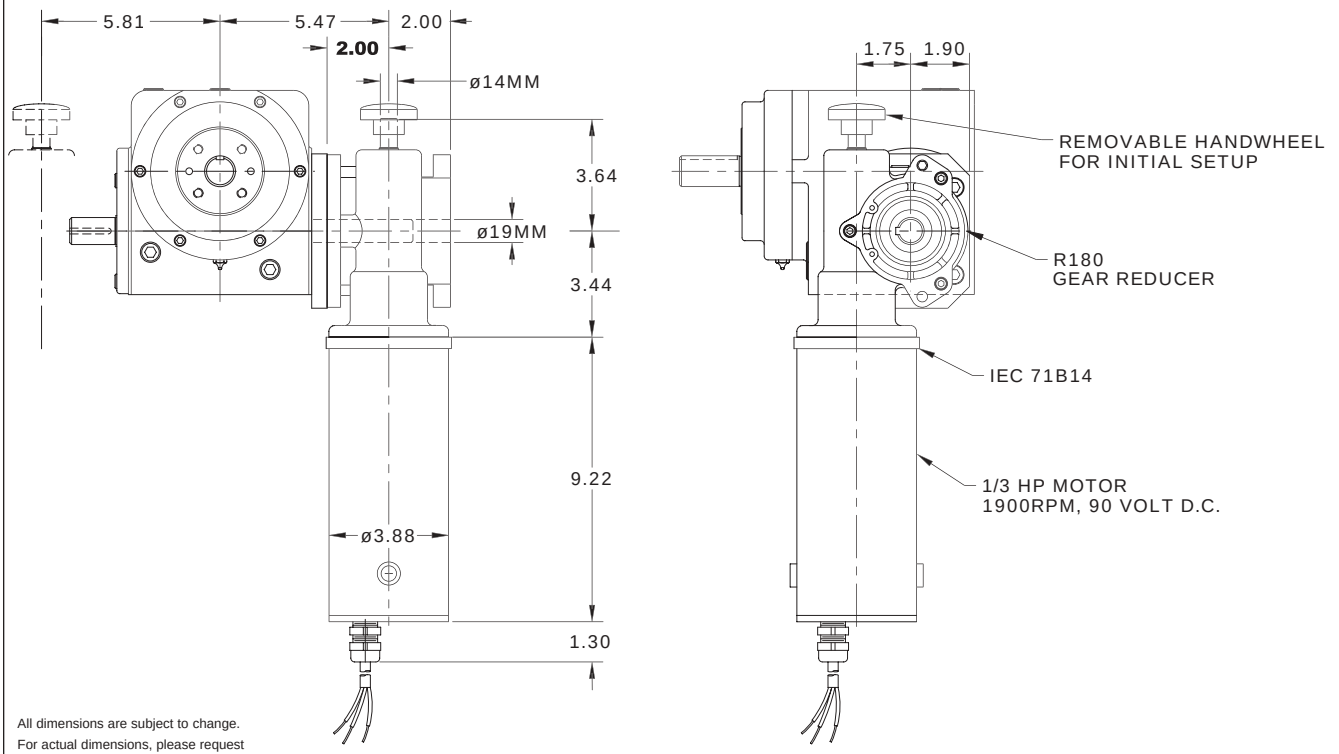

All dimensions are subject to change.
For actual dimensions, please request
the current drawing from IMC.

Standard Package

400RA with

- R180 Reducer (ratios from 5:1 to 60:1)
  - Double Extended Worm Shaft (Input)
  - Worm Shaft Handwheel
- Double Extended Camshaft (Input Shaft)
- 1/3 hp DC motor
- Varipak DC Motor Control (up to 30 cpm)
- Cycle Cam and Limit Switch Mounted to Camshaft
- Right Hand Cam

Accessories and Options

- 1/3 or 1 hp AC Drive Package with Inverter Duty Motor and Inverter Drive (up to 60 cpm)
- R225 Reducer (ratios from 5:1 to 60:1)
  - 1 hp DC Motor
  - 56C Motor Adapter and Coupling
- Output Overload Clutch Models: 2.3F, 2.3FC, 2.3S, 2.3C, 2.3FC-SD, 2.3S-SD, 2.3C-SD
  - Available Settings (in-lb): 400, 600, 700, 850, 1000, 1300, 1800, 2000, 2300
- Dual Cycle Cam and Limit Switch
- Finished cover for ceiling mount or tooling plate mounting
- Electric Clutch-Brake
- Air Clutch-Brake (with R225 only)
- Left Hand Cam
- Relief in Dwell for shot-pin applications
- 180-IOC or 225-IOC Input Overload Clutch

401RA

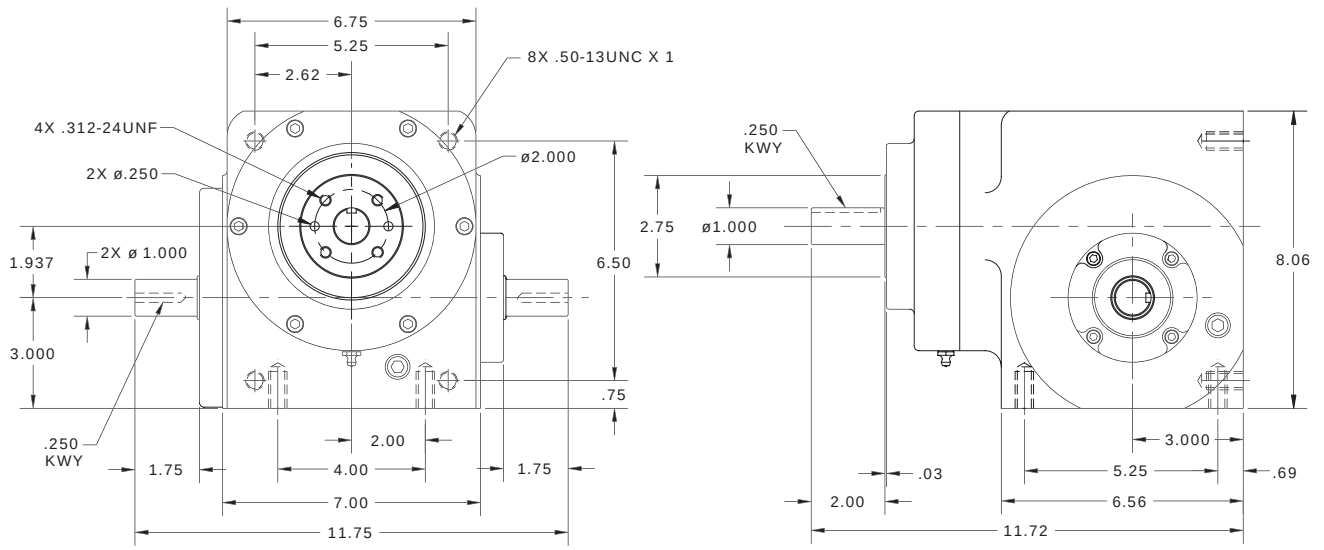

All dimensions are subject to change. For actual dimensions, please request the current drawing from IMC.

401RA Indexer Capacities

Stops (S)	Index Period (β)	Motion	B_{10} Capacity at 50 RPM (in-lb)	Internal Inertia (lb-in²)	Model
2	270	msc.33	1597	15	401RA2H24-270
3	270	ms	1514	15	401RA3H24-270
4	270	ms	1615	15	401RA4H24-270
4	180	ms	1805	15	401RA4H24-180
6	270	ms	1451	15	401RA6H24-270
	180	ms	1659	15	401RA6H24-180
	120	ms	1982	15	401RA6H24-120
8	270	ms	1711	15	401RA8H24-270
8	180	ms	1934	15	401RA8H24-180
8	120	ms	2146	15	401RA8H24-120
12	270	ms	1119	15	401RA12H20-270
	180	ms	1257	15	401RA12H20-180
	120	ms	1395	15	401RA12H20-120
	90	ms	1487	15	401RA12H20-90
16	270	ms	2372	15	401RA16H24-270 II
	180	ms	2647	15	401RA16H24-180 II

Other Motions (stops and index periods) available. Contact your IMC sales representative for more information.

Technical Specifications

Output Load Capacity – loads carried during index

Radial	1473 lbs
Thrust/Axial	1406 lbs
Moment	2945 in.-lbs

Accuracy	±48 arcsec / ±.0007" at 3" Radius
Repeatability	±24 arcsec / ±.0003" at 3" Radius

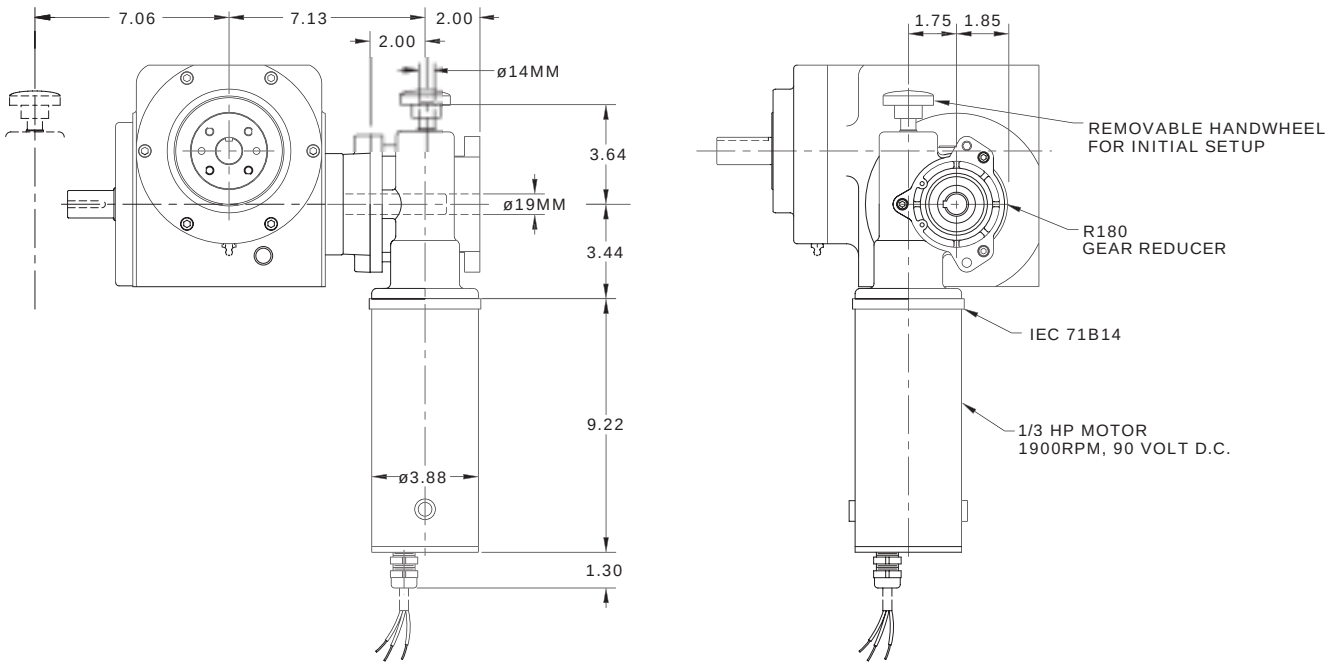

All dimensions are subject to change.
For actual dimensions, please request
the current drawing from IMC.

Standard Package

401RA with

- R180 Reducer (ratios from 5:1 to 60:1)
  - Double Extended Worm Shaft (Input)
  - Worm Shaft Handwheel
- Double Extended Camshaft (Input Shaft)
- 1/3 hp DC motor
- Varipak DC Motor Control (up to 30 cpm)
- Cycle Cam and Limit Switch Mounted to Camshaft
- Right Hand Cam

Accessories and Options

- 1/3 or 1 hp AC Drive Package with Inverter Duty Motor and Inverter Drive (up to 60 cpm)
- R225 Reducer (ratios from 5:1 to 60:1)
  - 1 hp DC Motor
  - 56C Motor Adapter and Coupling
- Output Overload Clutch Models: 2.3F, 2.3FC, 2.3S, 2.3C, 2.3FC-SD, 2.3S-SD, 2.3C-SD
  - Available Settings (in-lb): 400, 600, 700, 850, 1000, 1300, 1800, 2000, 2300
- Dual Cycle Cam and Limit Switch
- Finished cover for ceiling mount or tooling plate mounting
- Electric Clutch-Brake
- Air Clutch-Brake (with R225 only)
- Left Hand Cam
- Relief in Dwell for shot-pin applications
- 180-IOC or 225-IOC Input Overload Clutch

512RA

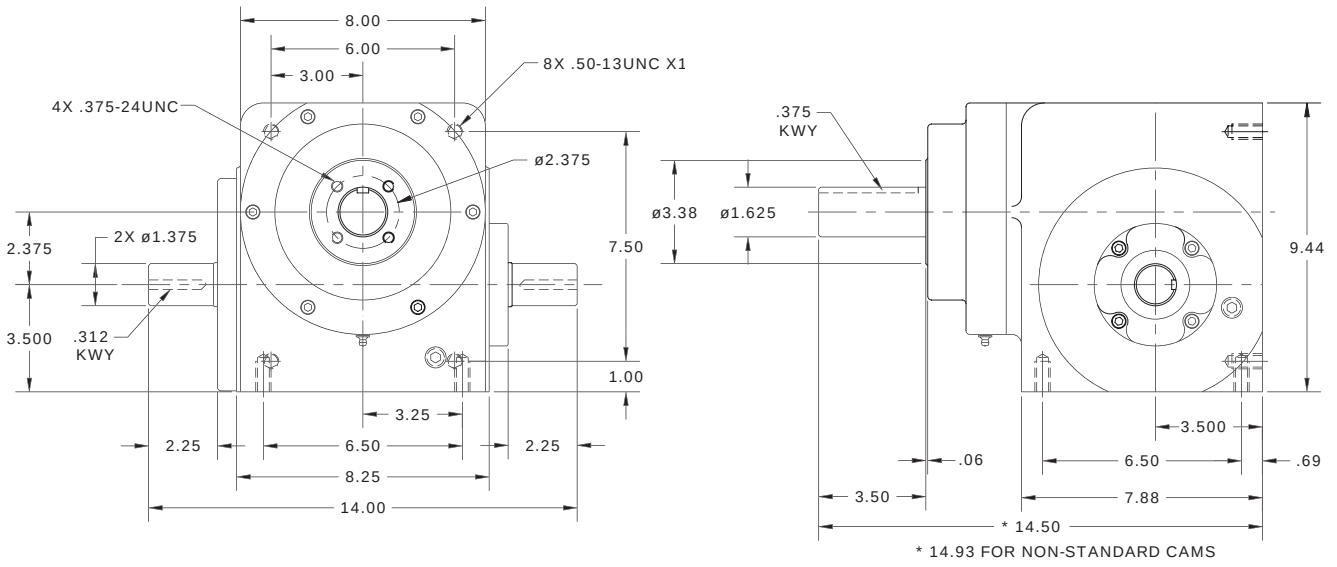

All dimensions are subject to change. For actual dimensions, please request the current drawing from IMC.

512RA Indexer Capacities

Stops (S)	Index Period (β)	Motion	B_{10} Capacity at 50 RPM (in-lb)	Internal Inertia (lb-in²)	Model
2	270	msc.33	2061	45	512RA2H32-270 MSC.33
3	270	ms	2360	45	512RA3H32-270
	180	msc.33	2852	45	512RA3H32-180 MSC 0.33
4	270	ms	2710	45	512RA4H32-270
	180	msc.33	3430	45	512RA4H32-180 MSC 0.33
	120	msc.33	3648	45	512RA4H32-120 MSC 0.33
6	270	ms	2613	45	512RA6H32-270
	180	ms	2992	45	512RA6H32-180
	120	ms	3179	45	512RA6H32-120
8	270	ms	3172	45	512RA8H32-270
	180	ms	3529	45	512RA8H32-180
	120	ms	3802	45	512RA8H32-120
12	270	ms	2738	45	512RA12H28-270
	180	ms	3064	45	512RA12H28-180
	120	ms	3176	45	512RA12H28-120
16	270	ms	4466	45	512RA16H32-270 II
	180	ms	4963	45	512RA16H32-180 II
24	270	ms	3497	45	512RA24H28-270 II
	180	ms	3977	45	512RA24H28-180 II
	120	ms	4347	45	512RA24H28-120 II

Other Motions (stops and index periods) available. Contact your IMC sales representative for more information.

Technical Specifications

Output Load Capacity – loads carried during index

Radial	3611 lbs
Thrust/Axial	2277 lbs
Moment	12,638 in.-lbs

Accuracy	±38 arcsec / ±.0011" at 6" Radius
Repeatability	±19 arcsec / ±.0006" at 6" Radius

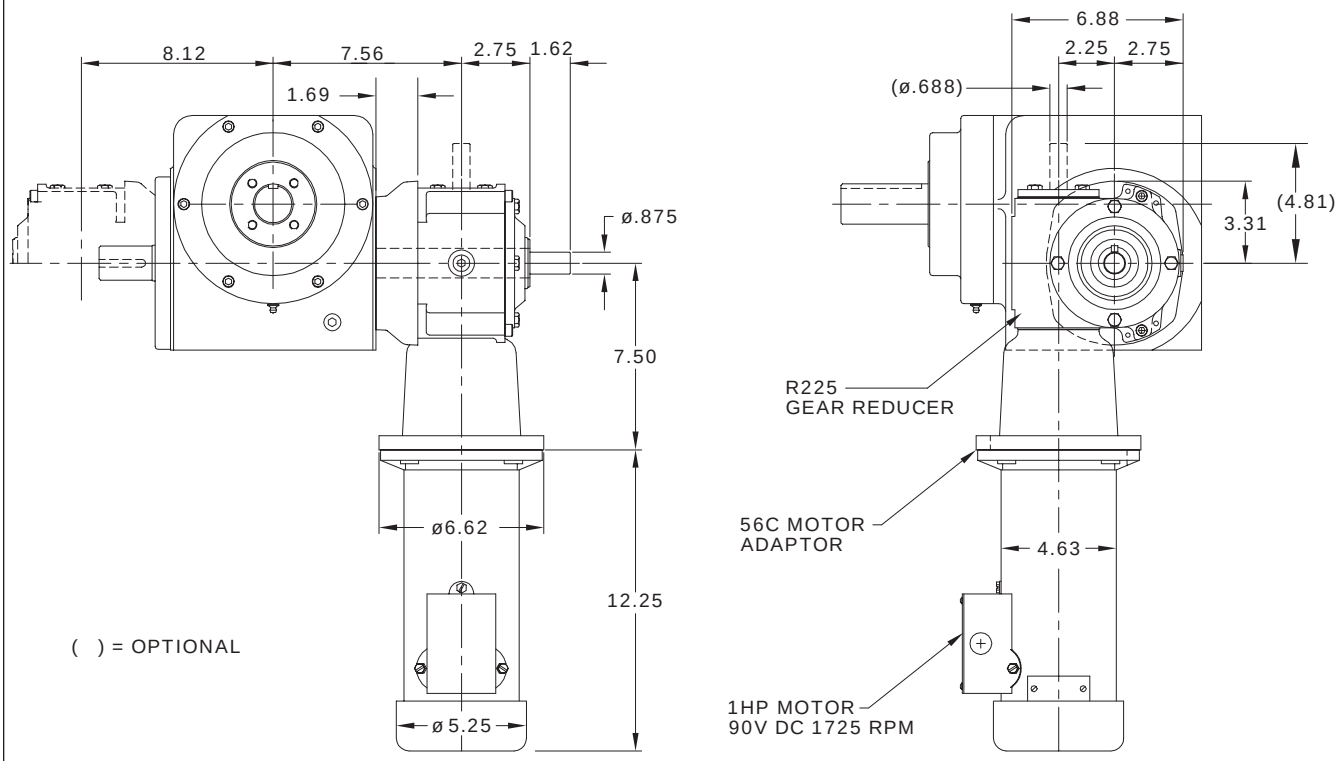

All dimensions are subject to change.
For actual dimensions, please request
the current drawing from IMC.

Standard Package

512RA with

- R225 Reducer (ratios from 5:1 to 60:1)
  - 56C Motor Adapter and Coupling
- Double Extended Camshaft (Input Shaft)
- 1 hp DC motor
- Varipak DC Motor Control (up to 30 cpm)
- Cycle Cam and Limit Switch Mounted to Camshaft
- Right Hand Cam

Accessories and Options

- 1 hp AC Drive Package with Inverter Duty Motor and Inverter Drive (up to 60 cpm)
- R260 Reducer (ratios from 5:1 to 60:1)
  - 56C Motor Adapter and Coupling
- Output Overload Clutch Models: 6.0F, 6.0FC, 6.0S and 6.0C, 6.0C-SD, 6.0FC-SD, 6.0S-SD
  - Available Settings (in-lb): 670, 825, 1100, 1400, 1700, 2000, 2300, 2500, 3000, 3800, 4000, 5000, 6000
- Dual Cycle Cam and Limit Switch
- Finished cover for ceiling mount or tooling plate mounting
- Electric Clutch-Brake
- Air Clutch-Brake
- Left Hand Cam
- Relief in Dwell for shot-pin applications
- 225-IOC or 260-IOC Input Overload Clutch

662RA

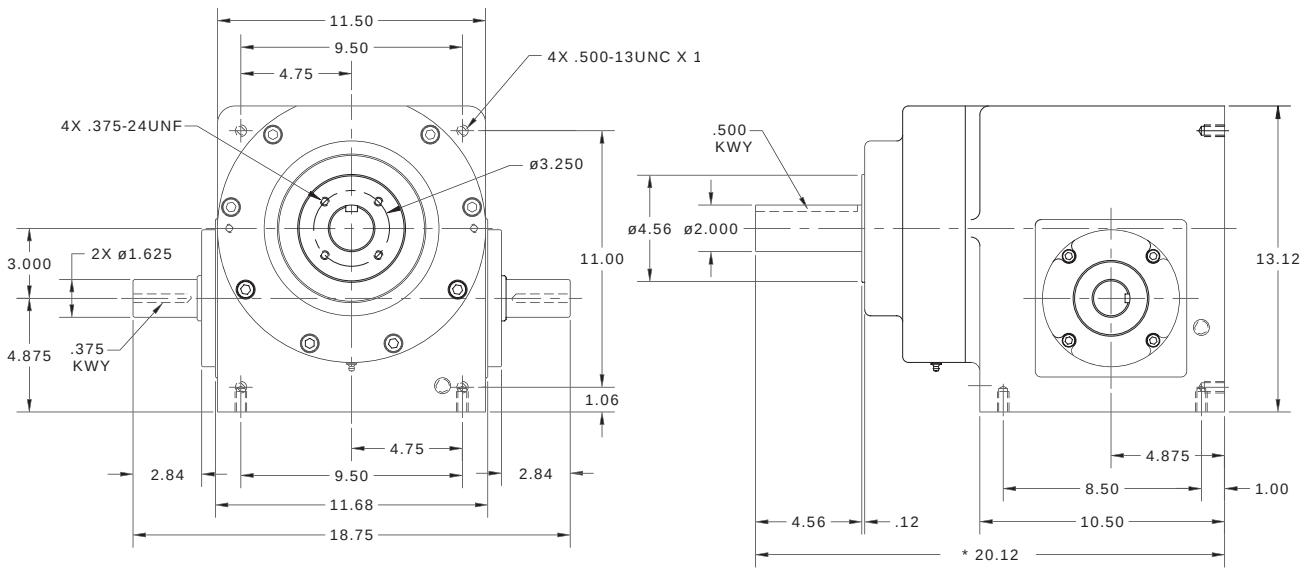

All dimensions are subject to change. For actual dimensions, please request the current drawing from IMC.

662RA Indexer Capacities

Stops (S)	Index Period (β)	Motion	B_{10} Capacity at 50 RPM (in-lb)	Internal Inertia (lb-in²)	Model
2	270	ms	6534	172	662RA2H48-270
3	270	ms	5913	169	662RA3H40-270
	180	ms	6146	169	662RA3H40-180
4	270	ms	6903	172	662RA4H40-270
	180	ms	7616	172	662RA4H40-180
	120	ms	7751	172	662RA4H40-120
6	270	ms	5734	169	662RA6H40-270
	180	ms	6949	169	662RA6H40-180
	120	ms	7551	169	662RA6H40-120
8	270	ms	7187	172	662RA8H40-270
	180	ms	8085	172	662RA8H40-180
	120	ms	8867	172	662RA8H40-120
	90	ms	8987	172	662RA8H40-90
12	270	ms	4504	165	662RA12H32-270
	180	ms	5052	165	662RA12H32-180
	120	ms	5511	165	662RA12H32-120
	90	ms	5536	165	662RA12H32-90
16	270	ms	9518	172	662RA16H40-270 II
	180	ms	10626	172	662RA16H40-180 II
24	270	ms	5846	165	662RA24H32-270 II

Other Motions (stops and index periods) available. Contact your IMC sales representative for more information.

Technical Specifications

Output Load Capacity – loads carried during index

Radial	5167 lbs
Thrust/Axial	5239 lbs
Moment	23,562 in.-lbs

Accuracy	±36 arcsec / ±.001" at 6" Radius
Repeatability	±18 arcsec / ±.0005" at 6" Radius

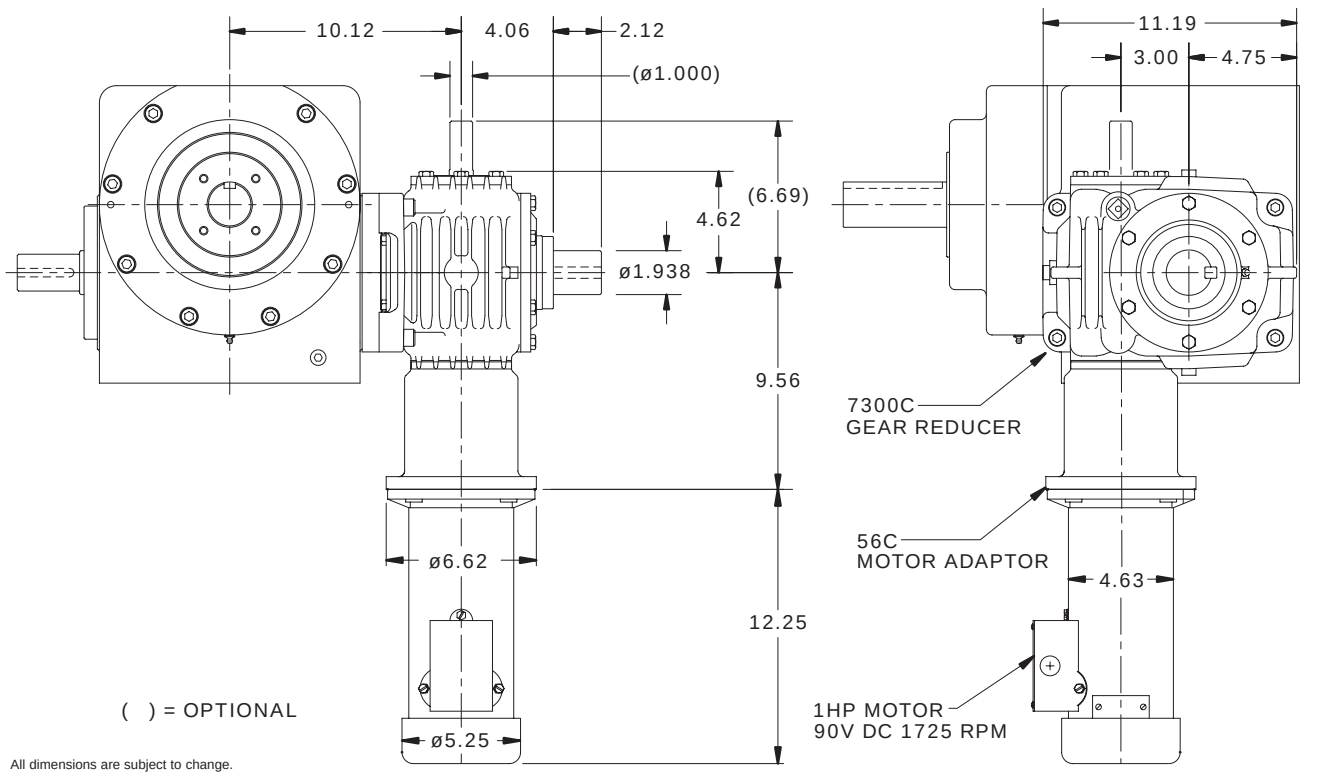

All dimensions are subject to change.
For actual dimensions, please request
the current drawing from IMC.

Standard Package

662RA with

- 7300C Reducer (ratios from 5:1 to 60:1)
  - Motor Adapter and Coupling
- Double Extended Camshaft (Input Shaft)
- 1 hp DC motor
- Varipak DC Motor Control (up to 30 cpm)
- Cycle Cam and Limit Switch Mounted to Camshaft
- Right Hand Cam

Accessories and Options

- 1 or 2 hp AC Drive Package with Inverter Duty Motor and Inverter Drive (up to 60 cpm)
- 7350C Reducer (ratios from 5:1 to 60:1)
  - Motor Adapter and Coupling
- 2 hp DC Motor with Varipak DC Motor Control (up to 30 cpm)
- Output Overload Clutch Models: 11F, 11FC, 11FC-SD
  - Available Settings (in-lb): 2300, 4000, 6000, 8500, 11,000
- Dual Cycle Cam and Limit Switch
- Finished cover for ceiling mount or tooling plate mounting
- Electric Clutch-Brake
- Air Clutch-Brake
- Left Hand Cam
- Relief in Dwell for shot-pin applications
- 300-IOC or 350-IOC Input Overload Clutch

663RAD

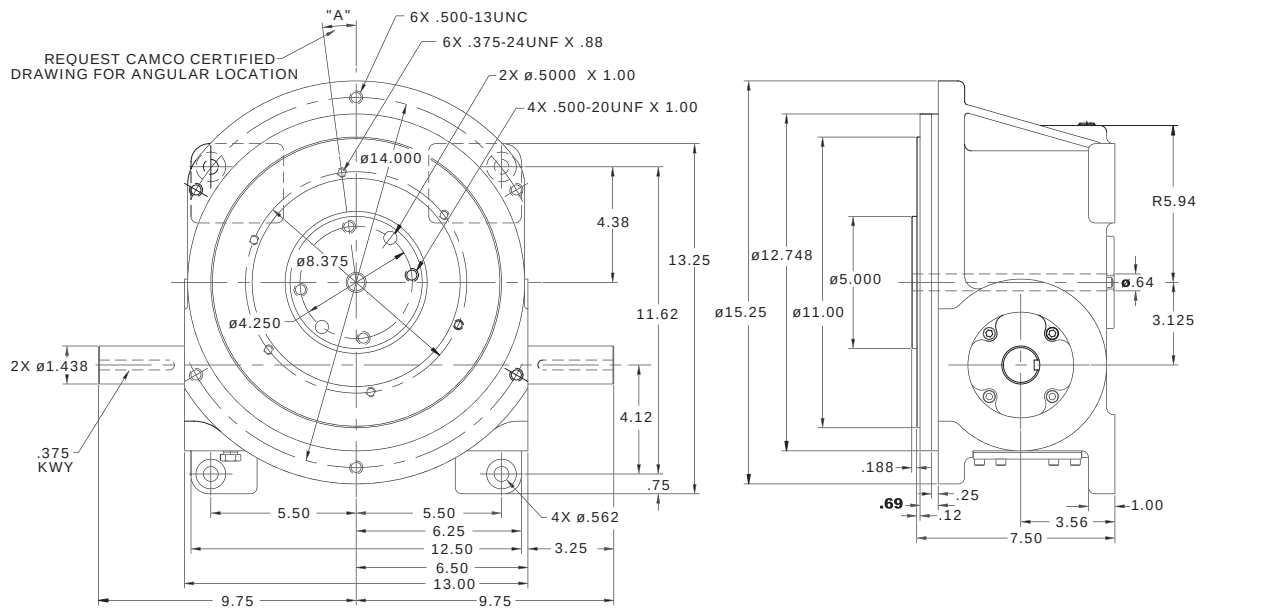

All dimensions are subject to change. For actual dimensions, please request the current drawing from IMC.

663RAD Indexer Capacities

Stops (S)	Index Period (β)	Motion	B_{10} Capacity at 50 RPM (in-lb)	Internal Inertia (lb-in²)	Model
3	270	ms	3194	636	663RAD3H36-270
	180	ms	3199	636	663RAD3H36-180
4	270	ms	3593	642	663RAD4H36-270
	180	ms	4091	638	663RAD4H32-180
6	270	ms	3662	636	663RAD6H36-270
	180	ms	4057	636	663RAD6H36-180
	120	ms	4187	636	663RAD6H36-120
8	270	ms	4347	642	663RAD8H36-270
	180	ms	4730	642	663RAD8H36-180
	120	ms	4973	642	663RAD8H32-120
12	270	ms	5200	647	663RAD12H32-270
	180	ms	5757	647	663RAD12H32-180
	120	ms	6167	647	663RAD12H32-120
	90	ms	4211	635	663RAD12H28-90
16	270	ms	3977	635	663RAD16H24-270
	180	ms	4445	635	663RAD16H24-180
	120	ms	4945	635	663RAD16H24-120
24	270	ms	7145	647	663RAD24H32-270 II
	180	ms	7306	647	663RAD24H32-180 II
	120	ms	8269	647	663RAD24H32-120 II

Other Motions (stops and index periods) available. Contact your IMC sales representative for more information.

Technical Specifications

Output Load Capacity – loads carried during index

Radial	6843 lbs
Thrust/Axial	4721 lbs
Moment	37,637 in.-lbs

Accuracy	±36 arcsec / ±.001" at 6" Radius
Repeatability	±18 arcsec / ±.0005" at 6" Radius

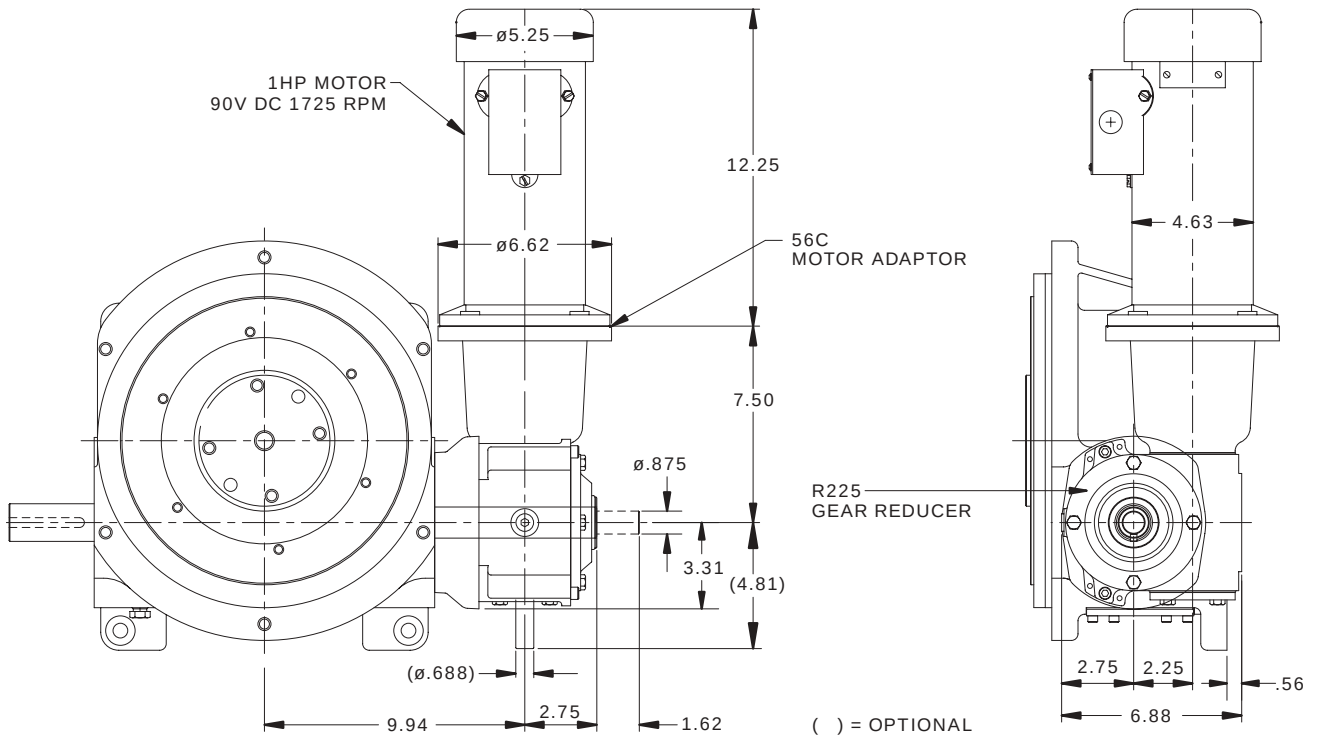

All dimensions are subject to change.
For actual dimensions, please request
the current drawing from IMC.

Standard Package

663RAD with

- R225 Reducer (ratios from 5:1 to 60:1)
  - 56C Motor Adapter and Coupling
- 1 hp DC motor
- Varipak DC Motor Control (up to 30 cpm)
- Cycle Cam and Limit Switch Mounted to Camshaft
- Double Extended Camshaft (Input Shaft)
- Center Through Hole (.64 in. Diameter)
- Right Hand Cam

Accessories and Options

- 1 hp AC Drive Package with Inverter Duty Motor and Inverter Drive (up to 60 cpm)
- R260 Reducer (ratios from 5:1 to 60:1)
  - 56C Motor Adapter and Coupling
- Output Overload Clutch Models: 11F, 11FC, 11FC-SD
  - Available Settings (in-lb): 2300, 4000, 6000, 8500, 11,000
- Output Overload Clutch Model: 7.8D
  - Available Settings (in-lb): 1400, 1700, 2600, 3200, 4200, 5000, 7200, 10,000
- “Super Accurate” Output Overload Clutch Model 7.8D-SA
  - Adjustable Setting: 2600-10,000 in-lb.
- Dual Cycle Cam and Limit Switch
- Finished cover for ceiling mount or tooling plate mounting
- Electric Clutch-Brake
- Air Clutch-Brake
- Left Hand Cam
- Relief in Dwell for shot-pin applications
- 225-IOC or 260-IOC Input Overload Clutch

900RAD

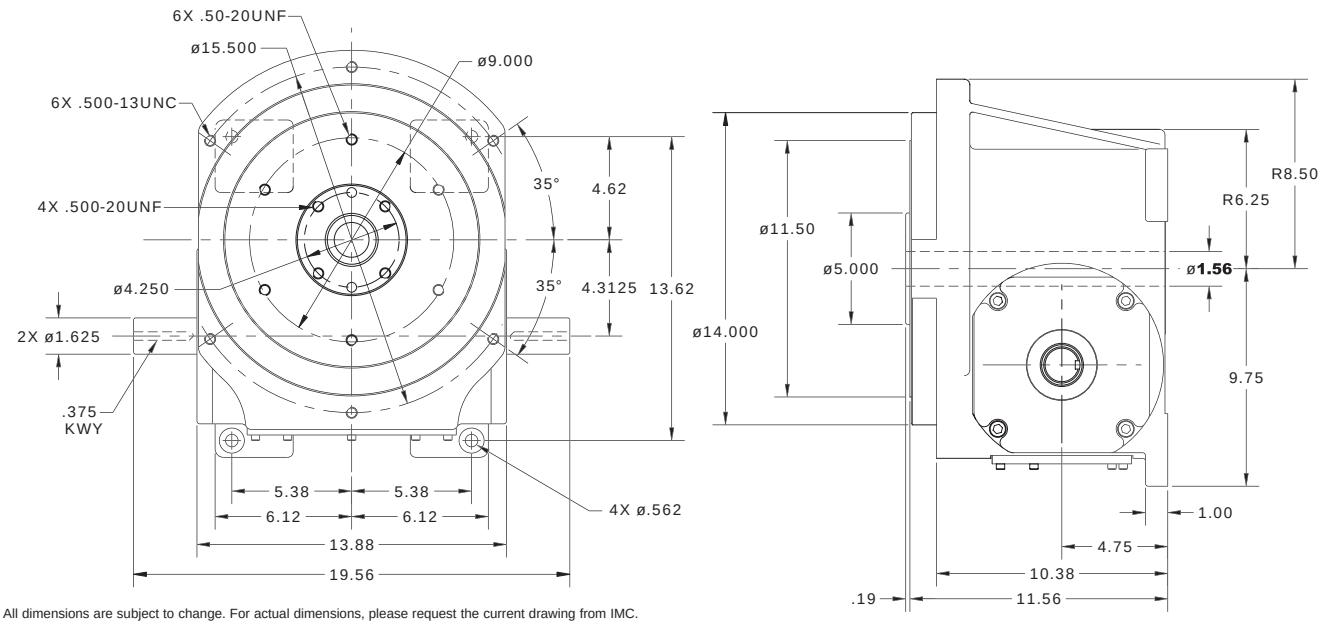

All dimensions are subject to change. For actual dimensions, please request the current drawing from IMC.

900RAD Indexer Capacities

Stops (S)	Index Period (β)	Motion	B_{10} Capacity at 50 RPM (in-lb)	Internal Inertia (lb-in²)	Model
2	330	msc.50	10260	1048	900RAD2H48-330 MSC 0.5
3	270	ms	10599	1048	900RAD3H48-270
	180	ms	7966	1002	900RAD3H40-180
4	270	ms	10653	1076	900RAD4H48-270
	180	ms	10016	1076	900RAD4H48-180
6	270	ms	11764	1076	900RAD6H48-270
	180	ms	12946	1048	900RAD6H48-180
	120	ms	13518	1076	900RAD6H48-120
8	270	ms	13467	1076	900RAD8H48-270
	180	ms	14969	1076	900RAD8H48-180
	120	ms	16095	1076	900RAD8H48-120
12	270	ms	16009	1132	900RAD12H48-270
	180	ms	13634	1056	900RAD12H40-180
	120	ms	14756	1056	900RAD12H40-120
	90	ms	15518	1056	900RAD12H40-90
16	270	ms	7152	1037	900RAD16H32-270
	180	ms	7990	1037	900RAD16H32-180
	120	ms	8682	1037	900RAD16H32-120
24	270	ms	22349	1132	900RAD24H48-270 II
	180	ms	18636	1056	900RAD24H40-180 II

Other Motions (stops and index periods) available. Contact your IMC sales representative for more information.

Technical Specifications

Output Load Capacity – loads carried during index

Radial	4956 lbs
Thrust/Axial	2940 lbs
Moment	28,496 in.-lbs

Accuracy	±27 arcsec / ±.0008" at 6" Radius
Repeatability	±13 arcsec / ±.0004" at 6" Radius

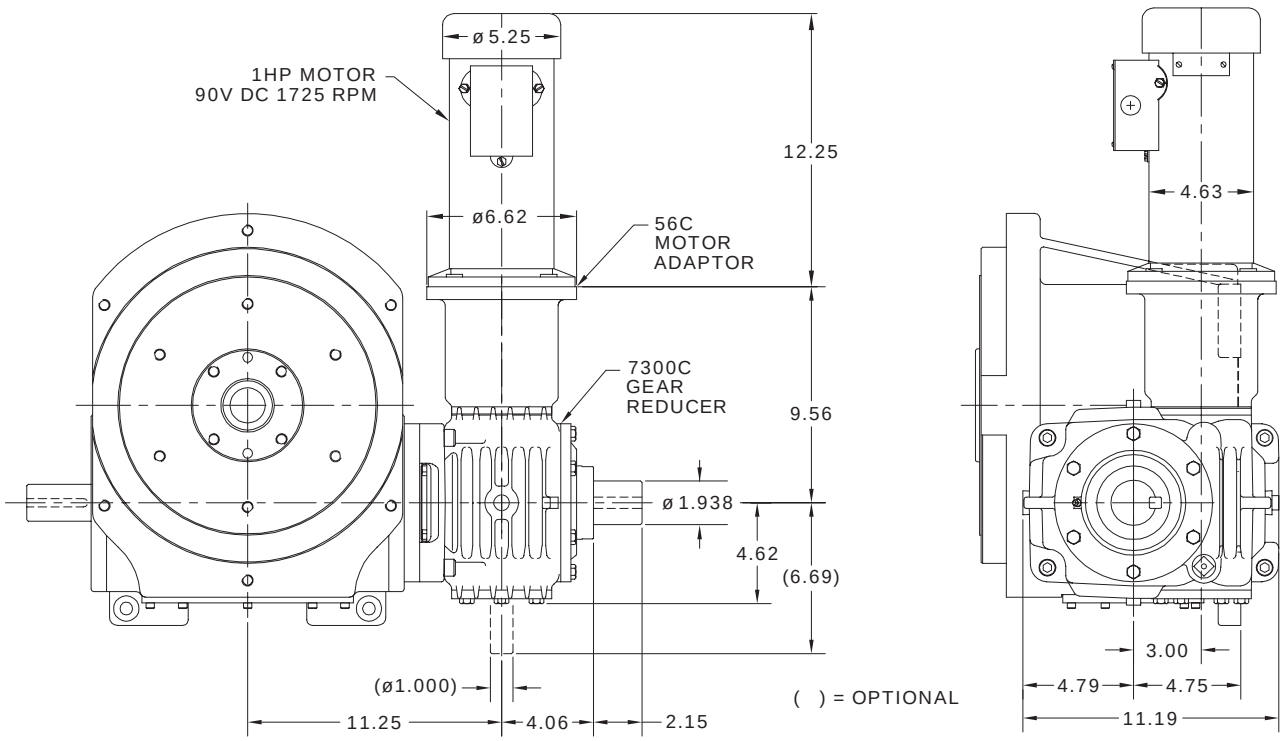

All dimensions are subject to change.
For actual dimensions, please request
the current drawing from IMC.

Standard Package

900RAD with

- 7300C Reducer (ratios from 5:1 to 60:1)
  - Motor Adapter and Coupling
- 1 hp DC motor
- Varipak DC Motor Control (up to 30 cpm)
- Cycle Cam and Limit Switch Mounted to Camshaft
- Center Through Hole (1.56 in. Diameter)
- Double Extended Camshaft (Input Shaft)
- Right Hand Cam

Accessories and Options

- 1 or 2 hp AC Drive Package with Inverter Duty Motor and Inverter Drive (up to 60 cpm)
- 7350C Reducer (ratios from 5:1 to 60:1)
  - Motor Adapter and Coupling
- 2 hp DC Motor with Varipak DC Motor Control (up to 30 cpm)
- Output Overload Clutch Model: 7.8D
  - Available Settings (in-lb): 1400, 1700, 2600, 3200, 4200, 5000, 7200, 10,000
- Output Overload Clutch Model: 18D
  - Available Settings (in-lb): 5000, 7000, 7800, 10,000, 12,000, 16,000, 19,000, 21,000, 27,000, 42,000, 45,000
- Dual Cycle Cam and Limit Switch
- Finished cover for ceiling mount or tooling plate mounting
- Electric Clutch-Brake
- Air Clutch-Brake
- Left Hand Cam
- Relief in Dwell for shot-pin applications
- 300-IOC or 350-IOC Input Overload Clutch

1200RAD

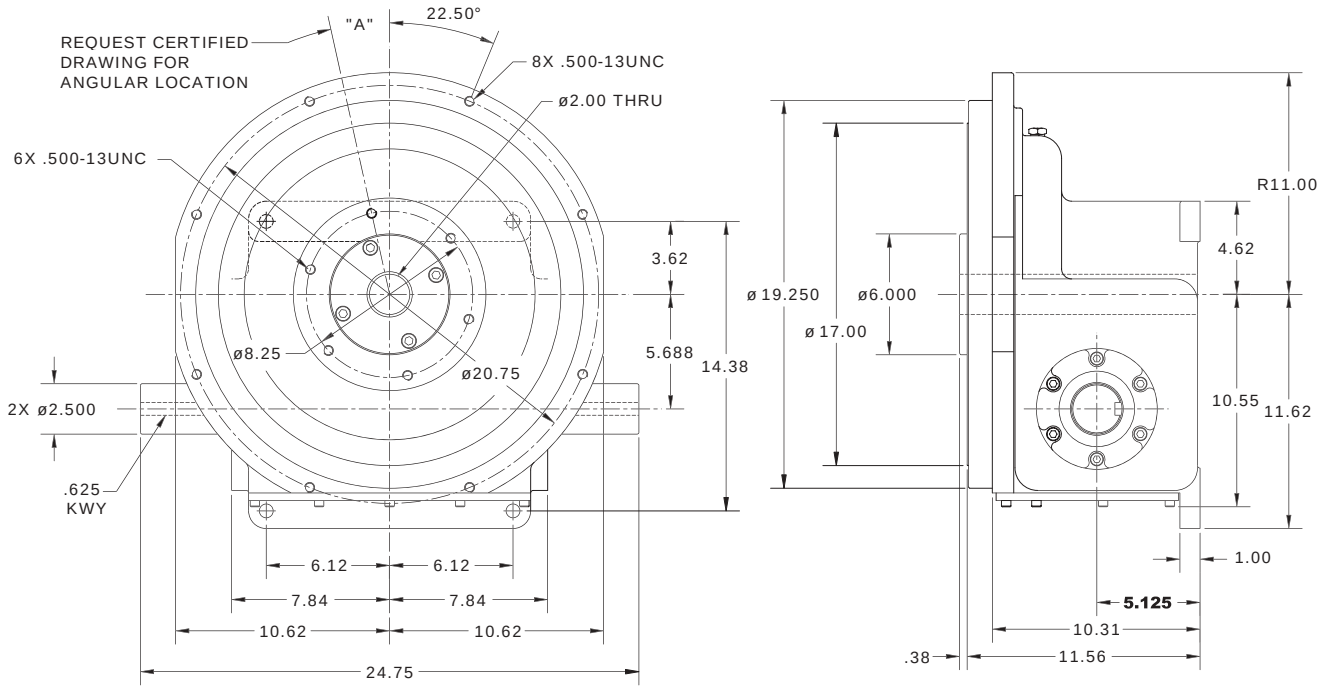

All dimensions are subject to change. For actual dimensions, please request the current drawing from IMC.

1200RAD Indexer Capacities

Stops (S)	Index Period (β)	Motion	B_{10} Capacity at 50 RPM (in-lb)	Internal Inertia (lb-in²)	Model
3	270	msc.33	26935	4458	1200RAD3H64-270 MSC.33
4	270	ms	29164	4675	1200RAD4H64-270
	180	msc.50	35864	4675	1200RAD4H64-180 MSC.50
6	270	ms	26972	4563	1200RAD6H64-270
	180	ms	29579	4563	1200RAD6H64-180
8	270	ms	30963	4675	1200RAD8H64-270
	180	ms	34386	4675	1200RAD8H64-180
	120	ms	27990	4514	1200RAD8H56-120
12	270	ms	36568	4899	1200RAD12H64-270
	180	ms	30667	4685	1200RAD12H56-180
	120	ms	33436	4685	1200RAD12H56-120
	90	ms	24799	4524	1200RAD12H48-90
16	270	ms	21934	4623	1200RAD16H48-270
	180	ms	24567	4623	1200RAD16H48-180
	120	ms	20574	4900	1200RAD16H40-120
24	270	ms	51080	4899	1200RAD24H64-270 II

Other Motions (stops and index periods) available. Contact your IMC sales representative for more information.

Technical Specifications

Output Load Capacity – loads carried during index

Radial	7110 lbs
Thrust/Axial	4138 lbs
Moment	60,438 in.-lbs

Accuracy	±20 arcsec / ±.0006" at 6" Radius
Repeatability	±10 arcsec / ±.0003" at 6" Radius

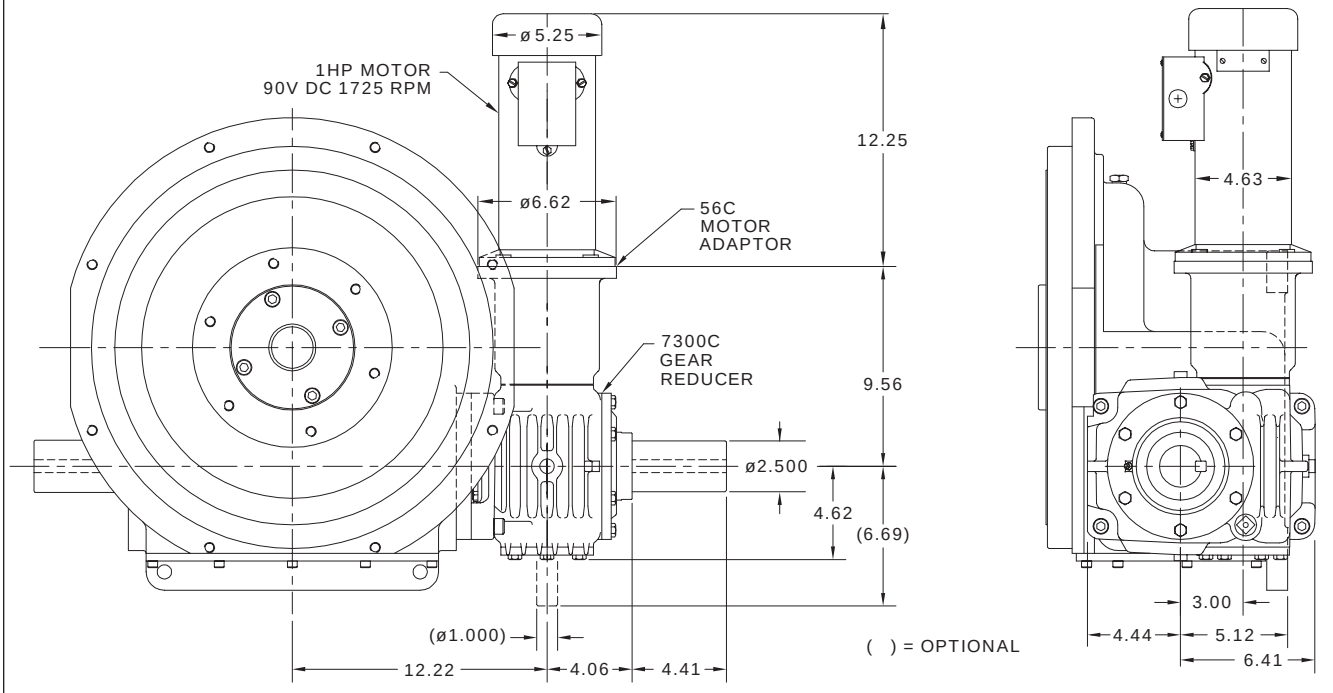

All dimensions are subject to change.
For actual dimensions, please request
the current drawing from IMC.

Standard Package

1200RAD with

- 7300C Reducer (ratios from 5:1 to 60:1)
  - Motor Adapter and Coupling
- 1 hp DC motor
- Varipak DC Motor Control (up to 30 cpm)
- Cycle Cam and Limit Switch Mounted to Camshaft
- Center Through Hole (2.00 in. Diameter)
- Double Extended Camshaft (Input Shaft)
- Right Hand Cam

Accessories and Options

- 1 or 2 hp AC Drive Package with Inverter Duty Motor and Inverter Drive (up to 60 cpm)
- 7350C Reducer (ratios from 5:1 to 60:1)
  - Motor Adapter and Coupling
- 2 hp DC Motor with Varipak DC Motor Control (up to 30 cpm)
- Output Overload Clutch Model: 31D
  - Available Settings (in-lb): 8500, 13,000, 20,000, 31,000
- Dual Cycle Cam and Limit Switch
- Finished cover for ceiling mount or tooling plate mounting
- Electric Clutch-Brake
- Air Clutch-Brake
- Left Hand Cam
- Relief in Dwell for shot-pin applications
- 300-IOC or 350-IOC Input Overload Clutch

F

Indexer Ordering Procedure

1. Model
2. Input Shaft Configuration
   - Side 1
   - Side 2
   - Double Input – DI (Standard)
3. Cam Lead (Helix)
   - Right Hand (standard)
   - Left Hand

NOTE: Input may rotate in either direction to achieve desired direction of output rotation

4. Indexer Mounting Position: 1-6

Position of Shafts

RA

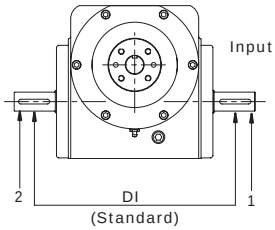

Cam Lead

Right Hand	Left Hand
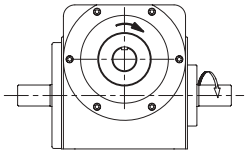	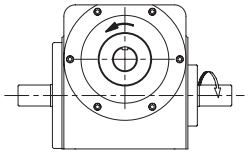

Position of Shafts

RAD

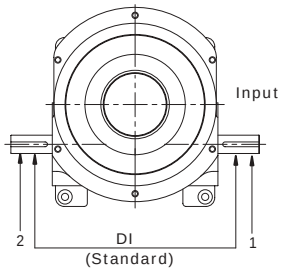

Cam Lead

Right Hand	Left Hand
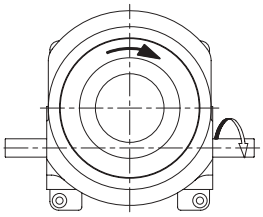	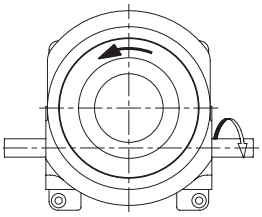

Indexer Mounting Position

RA

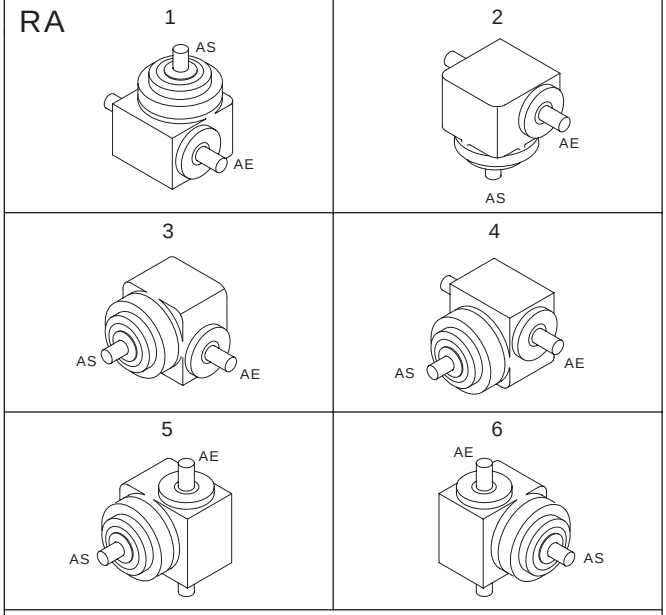

AE: Input Shaft | AS: Output Shaft

Indexer Mounting Position

RAD

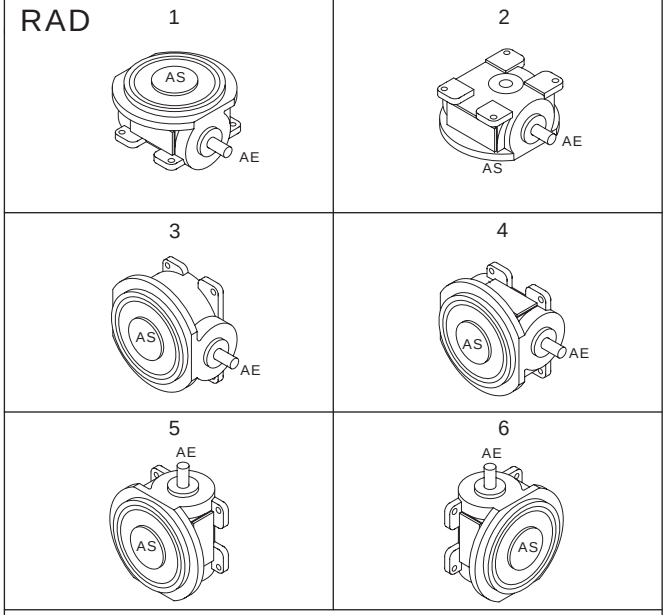

AE: Input Shaft | AS: Output Shaft

Reducer Ordering Procedure

1. Model
2. Ratio: 5:1, 10:1, 15:1, 20:1, 25:1, 30:1, 40:1, 50:1, 60:1
3. Motor Adapter
4. Reducer Input Shaft Extension: Single Input (SE) or Double Input (DE)
5. Mounting (see diagram below)

Reducer Mounting Position

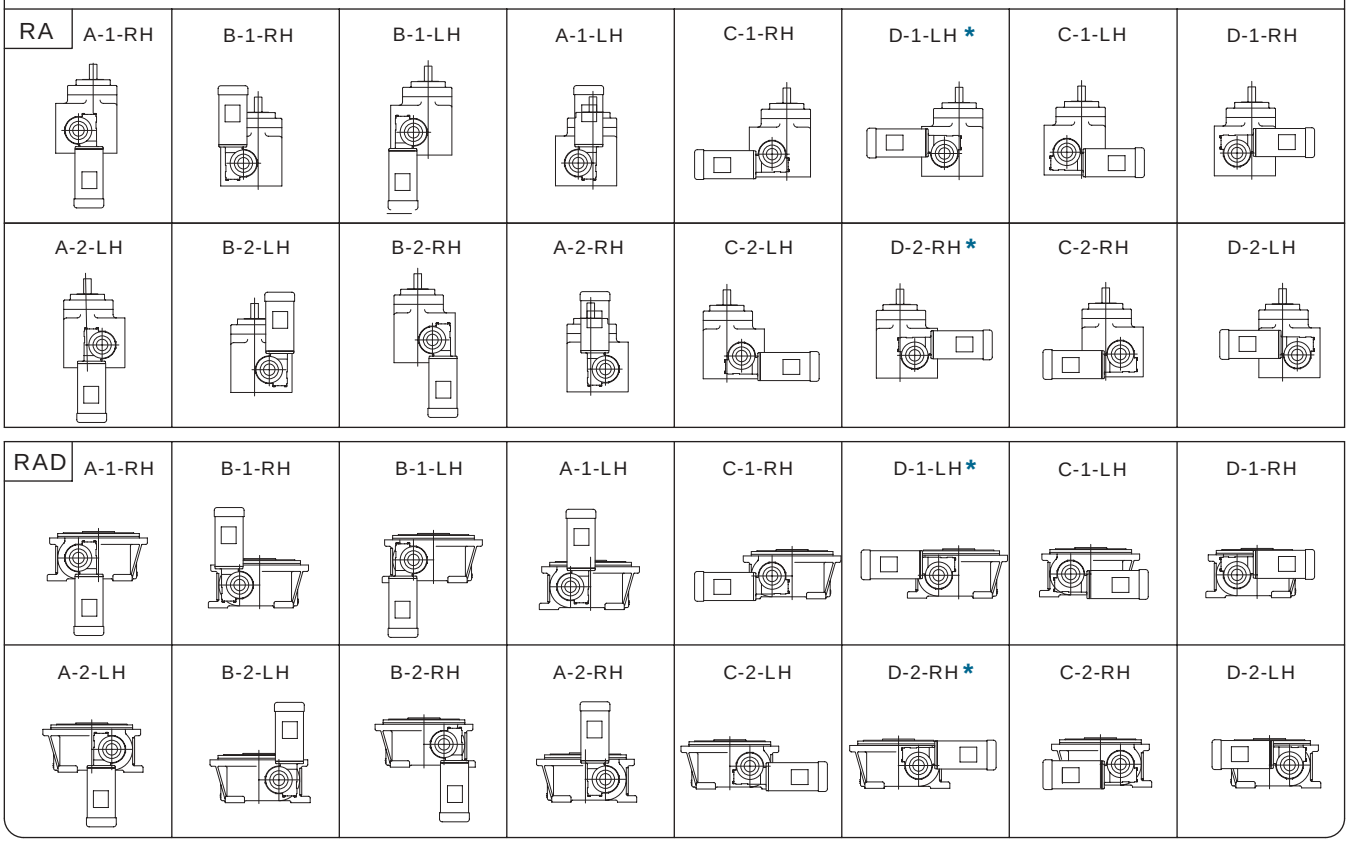

*** Consult IMC for availability of this mounting on RAD models**

F

Heavy Duty E-Series Index Drives

IMC
INDUSTRIAL MOTION CONTROL, LLC.
CAMCO FERGUSON

Features

The E-Series Index Drive is ideal for heavy-duty rotary dial applications with features including:

- Large output mounting surface supported by a 4-point contact bearing superior thrust and moment capacity
- Large center thru hole to accommodate stationary center post, electrical wiring and air or hydraulic lines
- Complete motorized drive package with reducer and brake-motor combinations to suit most applications
- Precision cam with preloaded cam followers for maximum accuracy
- Durable welded steel housing
- Preloaded “center rib” design for smooth acceleration and deceleration with precision positioning

750E

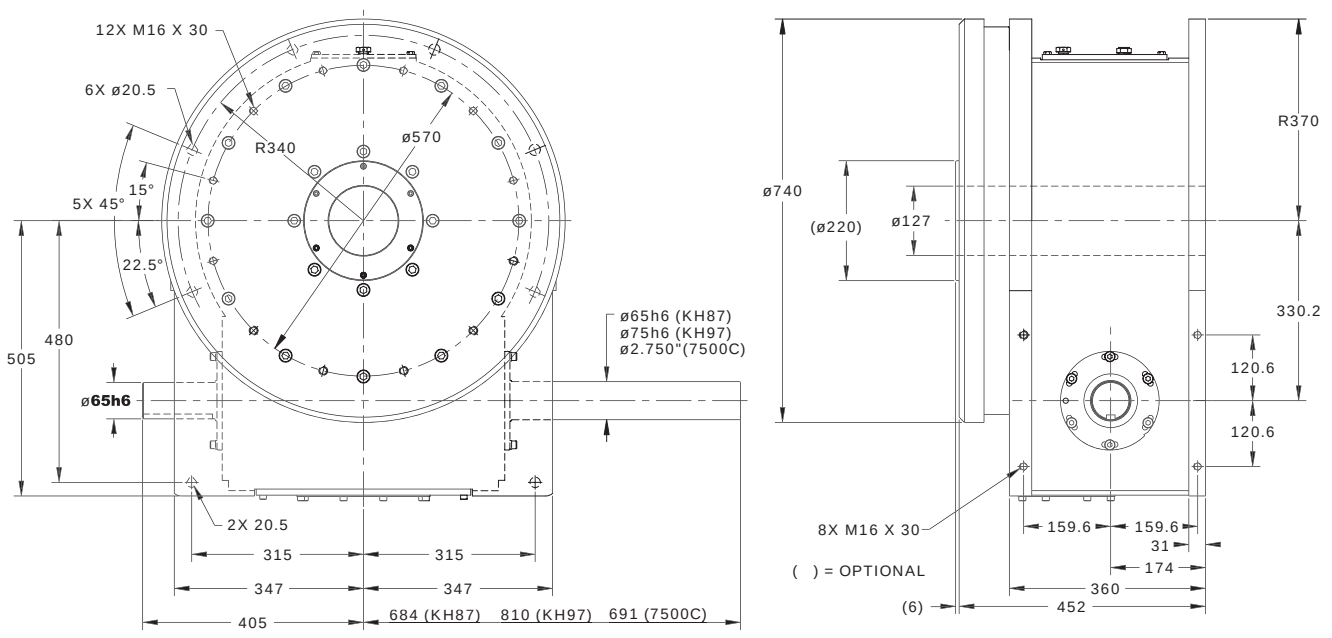

All dimensions are subject to change. For actual dimensions, please request the current drawing from IMC.

750E Indexer Capacities

Stops (S)	Index Period (β)	Motion	B_{10} Capacity at 50 RPM (in-lb)	Internal Inertia (lb-in²)	Model
2	330	msc.33	48,321	51,904	750E2H80-330
3	330	msc.50	84,296	52,588	750E3H80-330
4	330	msc.12	78,632	52,588	750E4H80-330
5	330	ms	75,358	52,246	750E5H80-330
6	330	ms	88,898	52,588	750E6H80-330
7	330	ms	113,457	52,929	750E7H80-330
8	330	ms	123,325	53,271	750E8H80-330
10	330	ms	76,199	52,246	750E10H80-330
12	330	ms	87,350	52,588	750E12H80-330
16	330	ms	132,131	53,271	750E16H80-330
24	330	ms	116,378	52,588	750E24H80-330

Other Motions (stops and index periods) available. Contact your IMC sales representative for more information.

Technical Specifications

Output Load Capacity – loads carried during index

Radial	29,200 lbs
Thrust/Axial	42,000 lbs
Moment	419,500 in-lb

Typical Application Dial Diameter: 55 in. to 110 in.

Accuracy	±27 arcsec / ±.002" at 15" radius
Repeatability	±13 arcsec / ±.0009" at 15" radius

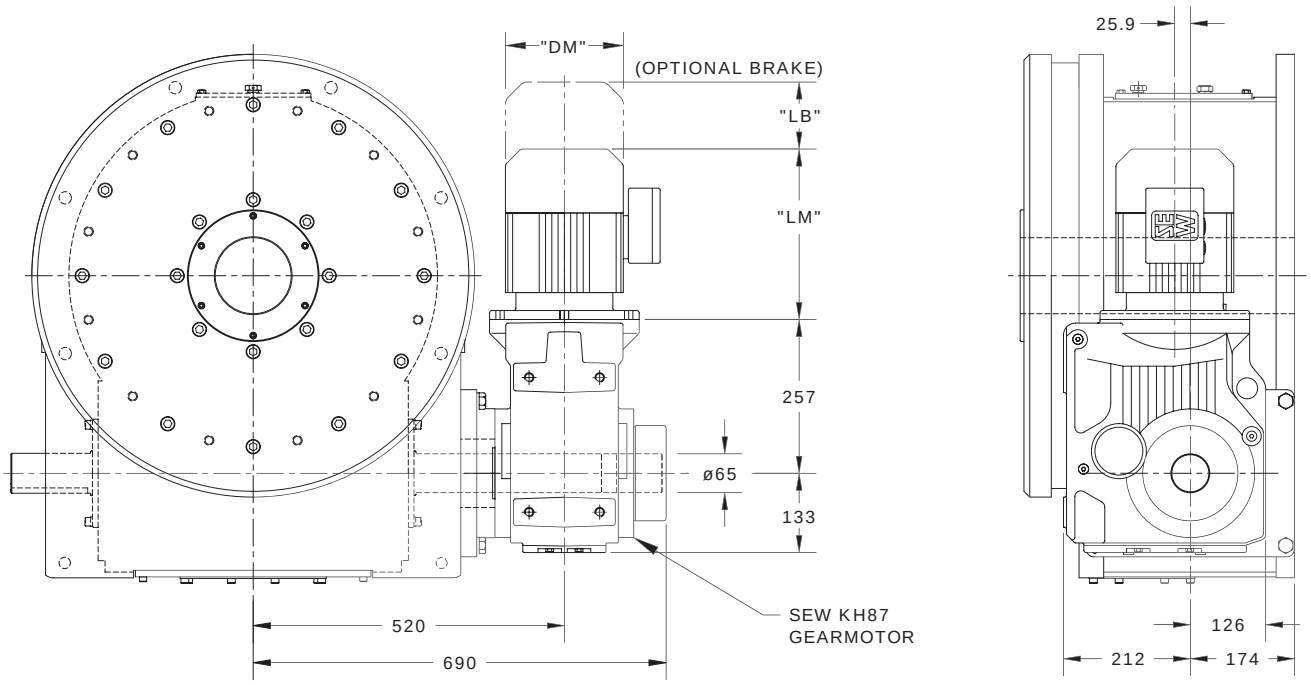

MOTOR FRAME	"DM"	"LM"	"LB"
IEC80	145	249	64
IEC90	197	269	85
IEC100	197	319	85
IEC112	221	349	80
IEC132S	221	375	80
IEC132M	275	402	112
IEC160M	275	441	112
IEC160L	331	488	156
IEC180	331	560	156

All dimensions are subject to change. For actual dimensions, please request the current drawing from IMC.

Standard Package

750E Indexer with

- KH87 Gear Reducer with Brake-motor
- Double Extended Camshaft (Input shaft)
- Center Thru Hole (127 mm)
- Cycle Cam & limit Switch
- Right Hand Cam

Optional Accessories

- Left Hand Cam
- Relief in Dwell for Shot-Pin applications
- Dual Cam & limit Switch
- KH97 Gear Reducer with Brake-motor
- Digi-Dog programmable rotary Limit Switch
- Stationary Center Post
- Visual Disk Dwell Indicator

950E

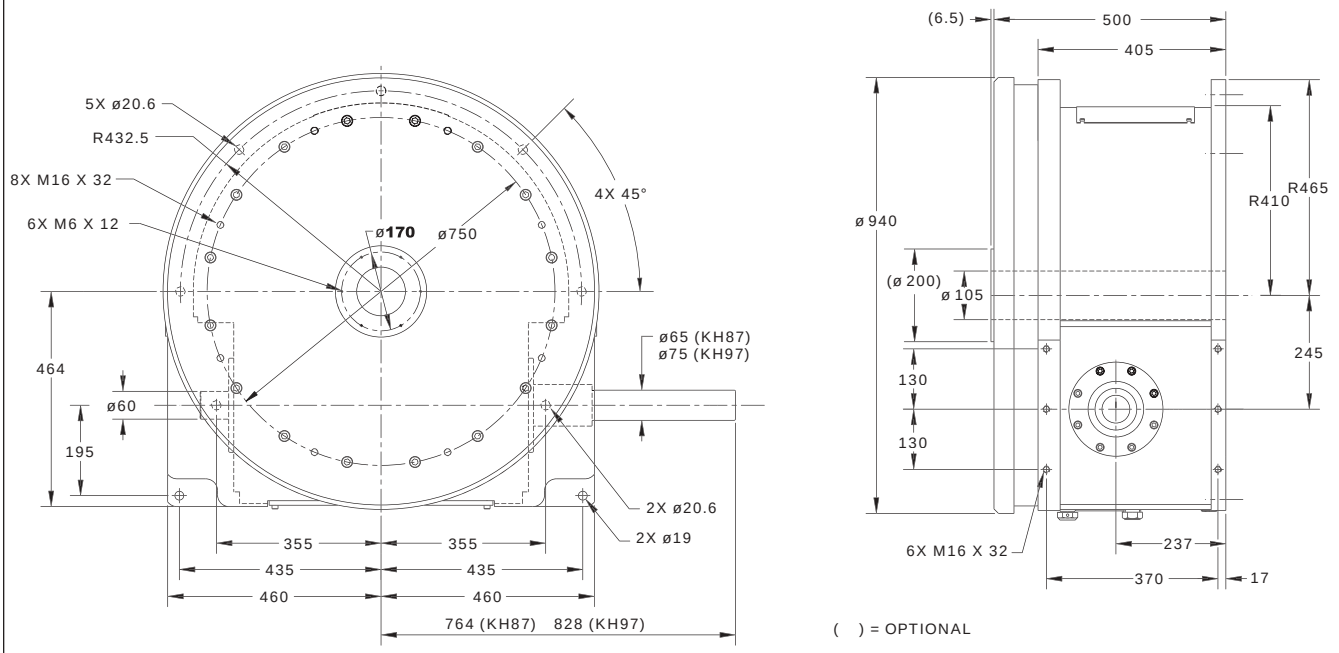

All dimensions are subject to change. For actual dimensions, please request the current drawing from IMC.

950E Indexer Capacities

Stops (S)	Index Period (β)	Motion	B_{10} Capacity at 50 RPM (in-lb)	Internal Inertia (lb-in²)	Model
2	330	msc0.50	76,483	129,000	950E2H80-330
3	330	msc0.50	141,666	142,900	950E3H96-330
4	330	ms	115,358	142,900	950E4H96-330
6	330	msc0.33	173,199	142,900	950E6H96-330
8	330	ms	120,209	120,600	950E8H96-330
12	330	ms	156,333	142,900	950E12H96-330
16	330	ms	88,617	120,600	950E16H80-330
18	330	ms	181,002	120,600	950E18H96-330 II
24	330	ms	197,655	142,900	950E24H96-330 II

Other Motions (stops and index periods) available. Contact your IMC sales representative for more information.

Technical Specifications

Output Load Capacity – loads carried during index

Radial	52,600 lbs
Thrust/Axial	75,850 lbs
Moment	977,500 in-lb

Typical Application Dial Diameter: 70 in. to 140 in.

Accuracy ±24 arcsec / ±.0023" at 20" radius

Repeatability ±12 arcsec / ±.0012" at 20" radius

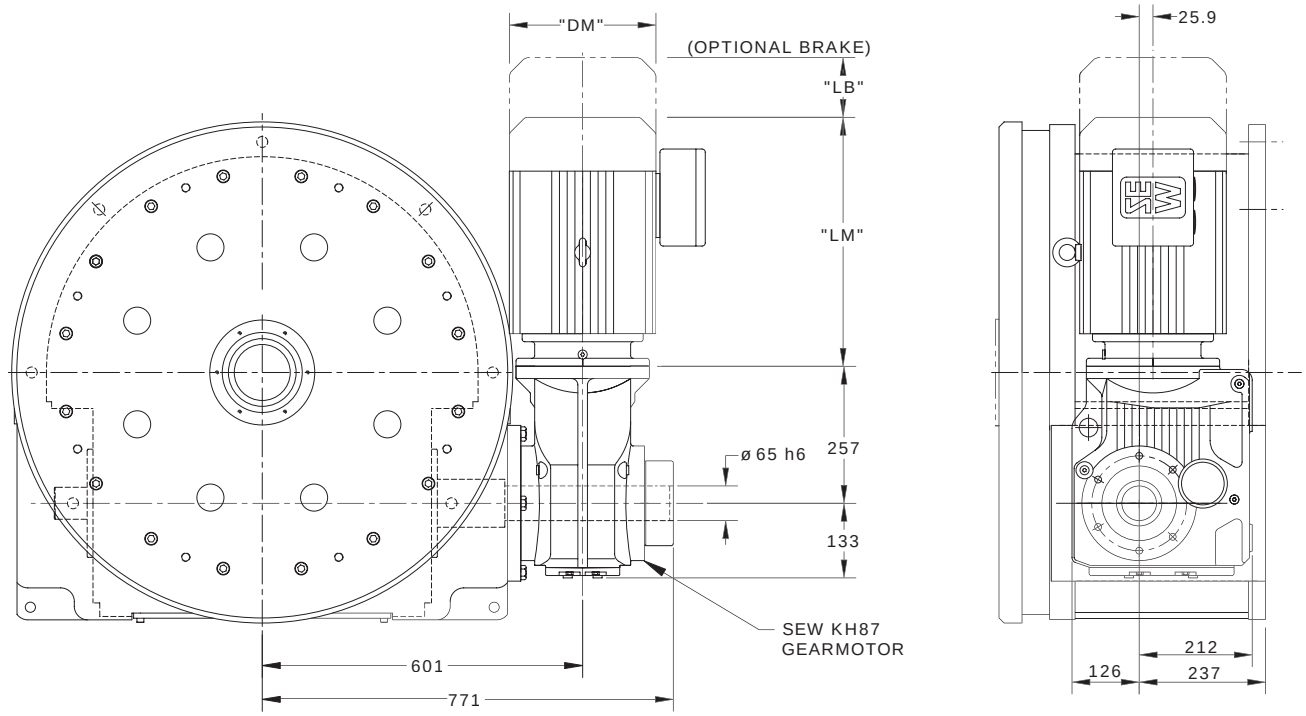

MOTOR FRAME	"DM"	"LM"	"LB"
IEC80	145	249	64
IEC90	197	269	85
IEC100	197	319	85
IEC112	221	349	80
IEC132S	221	375	80
IEC132M	275	402	112
IEC160M	275	441	112
IEC160L	331	488	156
IEC180	331	560	156

All dimensions are subject to change. For actual dimensions, please request the current drawing from IMC.

Standard Package

950E Indexer with

- KH87 Gear Reducer with Brake-motor
- Double Extended Camshaft (Input shaft)
- Center Thru Hole (105 mm)
- Cycle Cam & limit Switch
- Right Hand Cam

Optional Accessories

- Left Hand Cam
- Relief in Dwell for Shot-Pin applications
- Dual Cam & limit Switch
- KH97 Gear Reducer with Brake-motor
- Digi-Dog Programmable Rotary Limit Switch
- Stationary Center Post
- Visual Disk Dwell Indicator

1150E

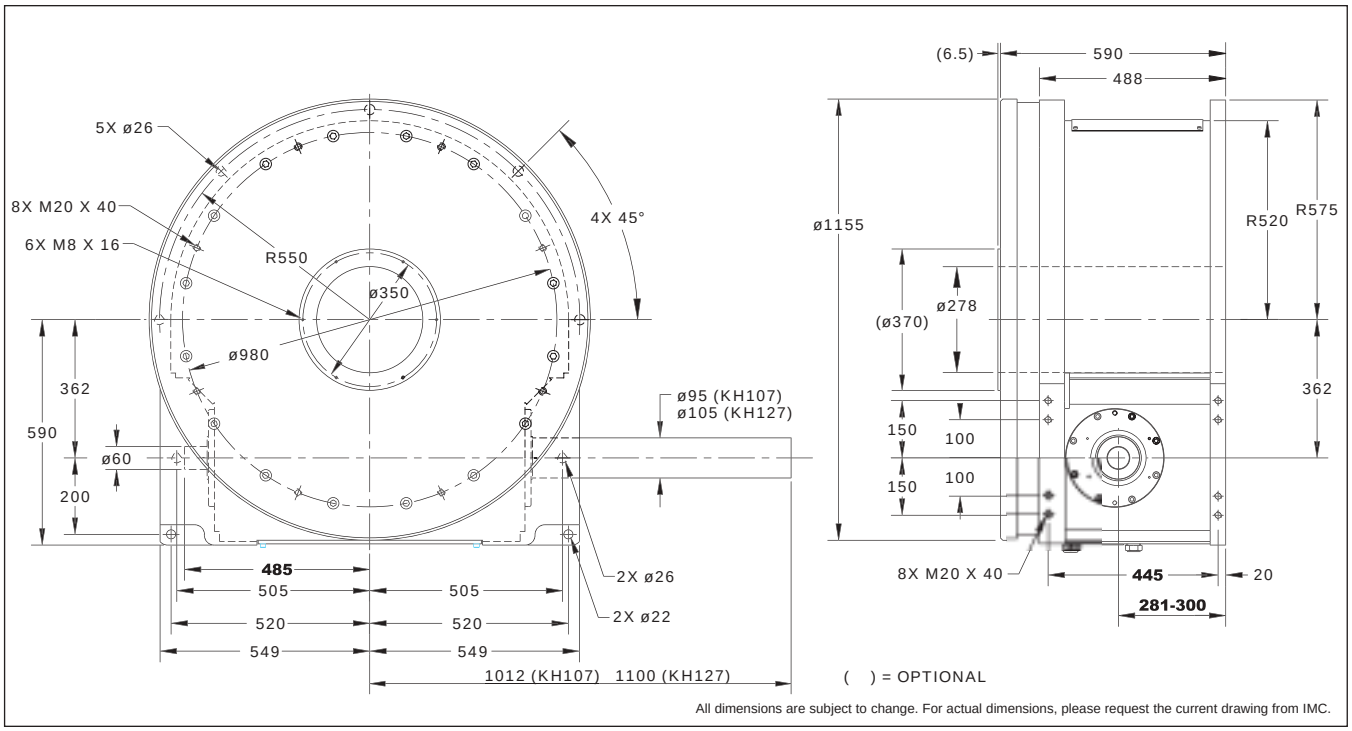

All dimensions are subject to change. For actual dimensions, please request the current drawing from IMC.

1150E Indexer Capacities

Stops (S)	Index Period (β)	Motion	B_{10} Capacity at 50 RPM (in-lb)	Internal Inertia (lb-in²)	Model
2	330	msc.33	213,286	432,900	1150E2H128-330
3	330	msc.33	347,000	457,700	1150E3H128-330
4	330	msc.33	422,631	549,900	1150E4H128-330
6	330	msc.33	501,719	549,900	1150E6H128-330
8	330	ms	403,849	713,800	1150E8H128-330
12	330	ms	471,297	549,900	1150E12H128-330
16	330	ms	373,393	713,800	1150E16H128-330
18	330	ms	391,863	546,720	1150E18H128-330
24	330	ms	594,610	549,900	1150E24H128-330 II

Other Motions (stops and index periods) available. Contact your IMC sales representative for more information.

Technical Specifications

Output Load Capacity – loads carried during index

Radial	59,025 lbs
Thrust/Axial	85,470 lbs
Moment	1,409,000 in-lb

Typical Application Dial Diameter: 90 in. to 180 in.

Accuracy	±16 arcsec / ±.002" at 25" radius
Repeatability	±8 arcsec / ±.001" at 25" radius

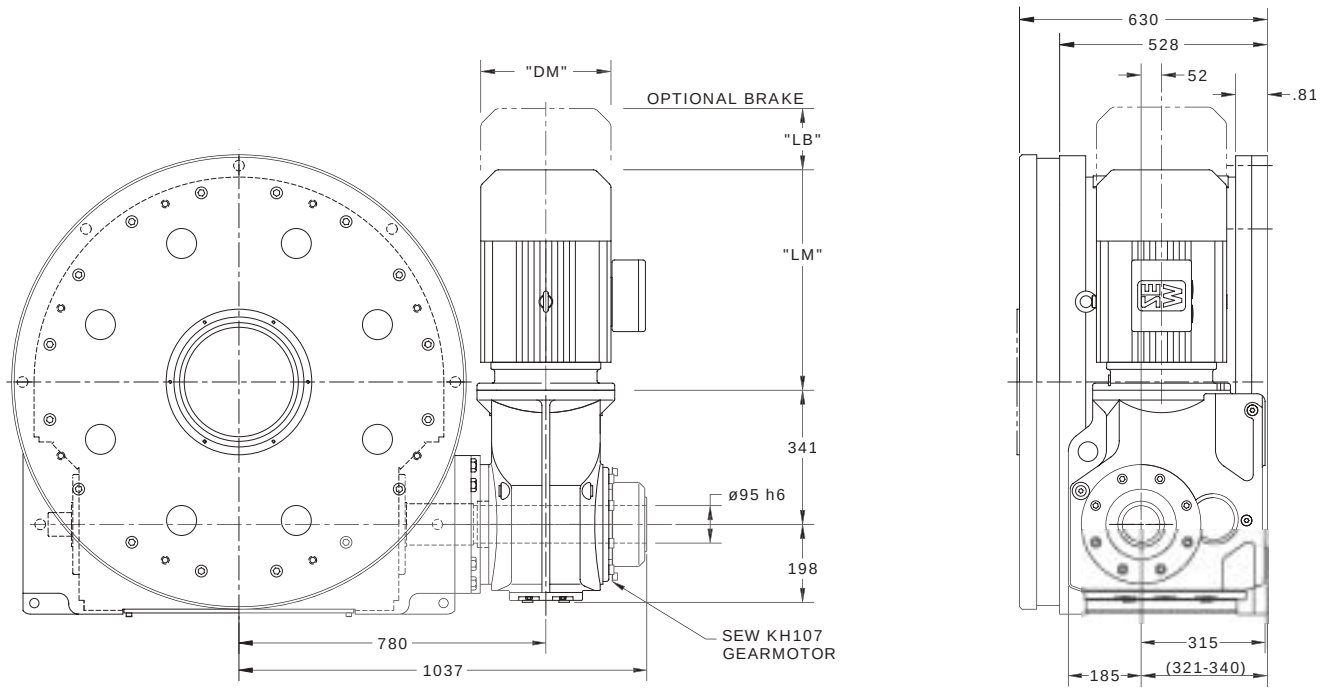

MOTOR FRAME	"DM"	"LM"	"LB"
IEC100	197	319	85
IEC112	221	349	80
IEC132S	221	375	80
IEC132M	275	402	112
IEC160M	275	441	112
IEC160L	331	488	156
IEC180	331	560	156
IEC200	394	608	156
IEC225	394	690	156

All dimensions are subject to change. For actual dimensions, please request the current drawing from IMC.

Standard Package

1150E Indexer with

- KH107 Gear Reducer with Brake-motor
- Double Extended Camshaft (Input shaft)
- Center Thru Hole (278 mm)
- Cycle Cam & limit Switch
- Right Hand Cam

Optional Accessories

- Left Hand Cam
- Relief in Dwell for Shot-Pin applications
- Dual Cam & limit Switch
- KH127 Gear Reducer with Brake-motor
- Digi-Dog Programmable Rotary Limit Switch
- Stationary Center Post
- Visual Disk Dwell Indicator

1550E

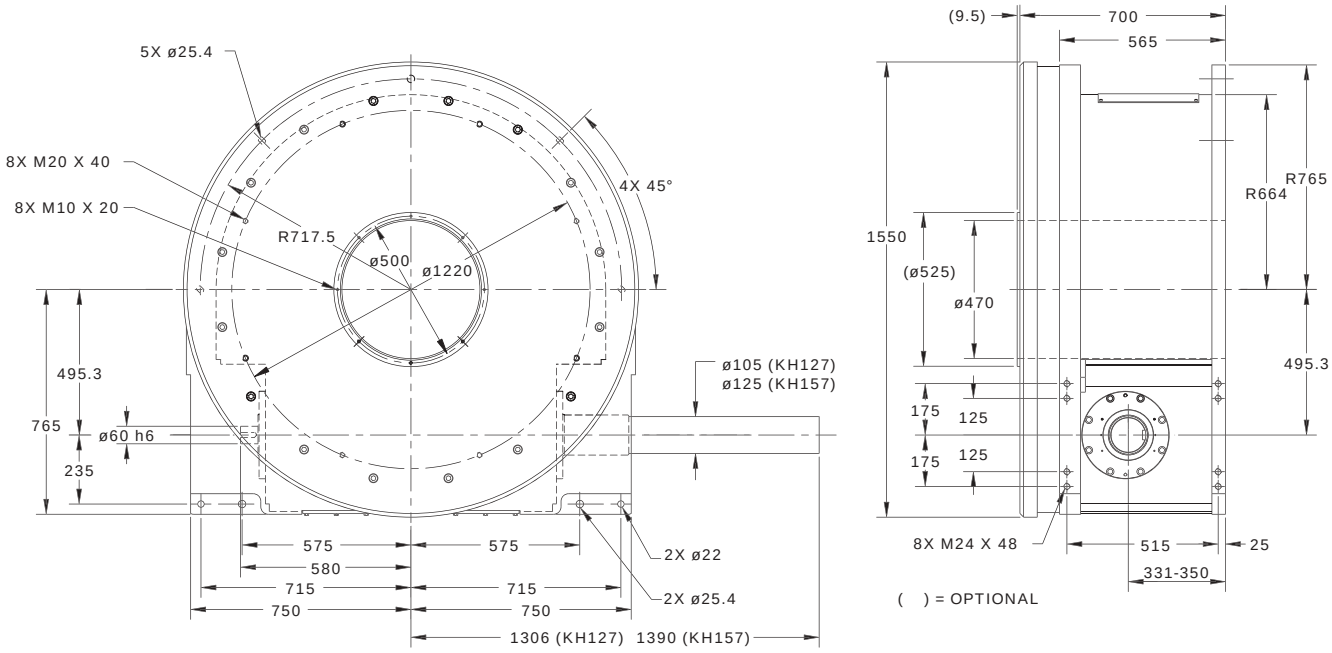

All dimensions are subject to change. For actual dimensions, please request the current drawing from IMC.

1550E Indexer Capacities

Stops (S)	Index Period (β)	Motion	B_{10} Capacity at 50 RPM (in-lb)	Internal Inertia (lb-in²)	Model
2	330	msc0.50	334,268	1,860,966	1550E2H128-330
3	330	msc0.50	500,271	2,098,100	1550E3H128-330
	300	msc0.67	550,816	2,098,100	1550E3H128-300
4	330	msc0.33	908,469	2,098,300	1550E4H160-330
6	330	ms	943,089	2,098,300	1550E6H160-330
8	330	msc0.33	812,799	2,414,700	1550E8H160-330
12	330	ms	1,046,026	2,098,300	1550E12H160-330
16	330	ms	761,260	2,414,700	1550E16H160-330
24	330	ms	1,297,097	2,098,300	1550E24H160-330 II
32	300	ms	1,086,935	2,414,700	1550E32H160-300 II

Other Motions (stops and index periods) available. Contact your IMC sales representative for more information.

Technical Specifications

Output Load Capacity – loads carried during index

Radial	82,600 lbs
Thrust/Axial	120,000 lbs
Moment	2,904,000 in-lb

Typical Application

Dial Diameter:	118 in. to 236 in.
Accuracy	±24 arcsec / ±.0035" at 30" radius
Repeatability	±6 arcsec / ±.0009" at 30" radius

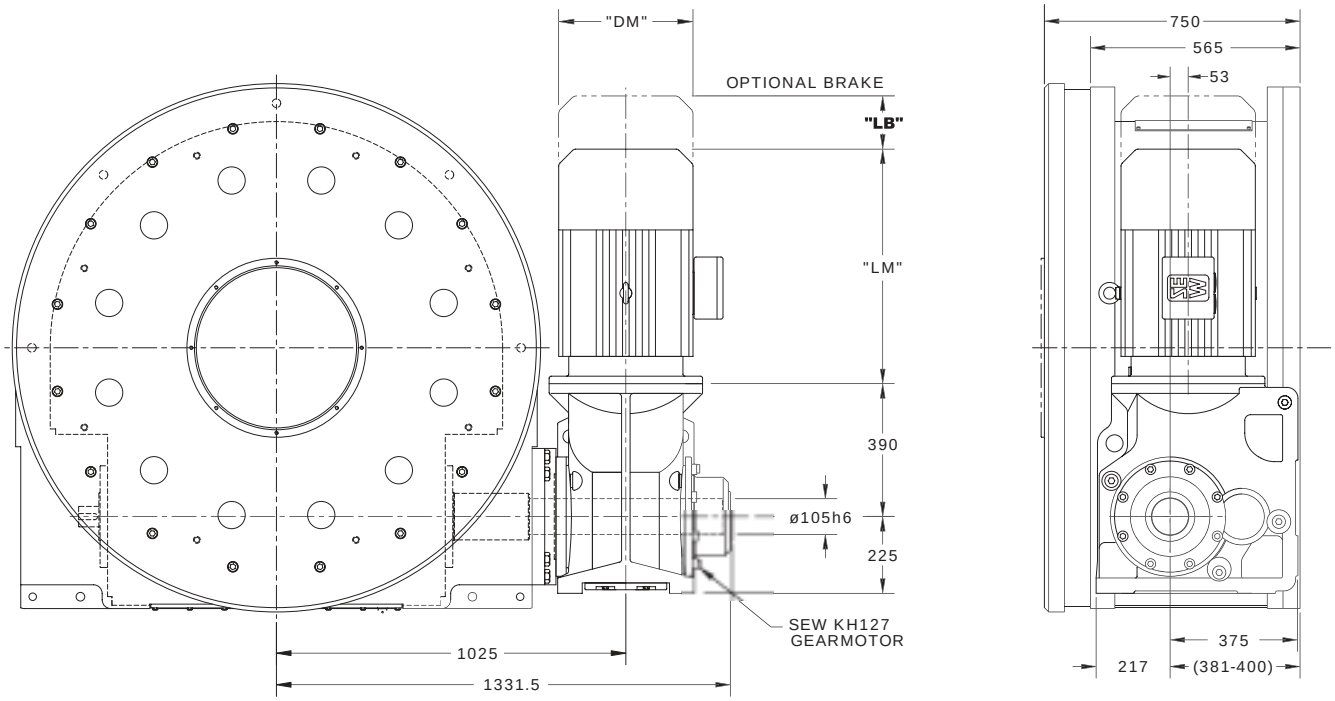

MOTOR FRAME	"DM"	"LM"	"LB"
IEC132M	275	402	112
IEC132ML	275	462	112
IEC160M	275	441	112
IEC160L	331	488	156
IEC180	331	560	156
IEC200	394	608	156
IEC225	394	690	156

All dimensions are subject to change. For actual dimensions, please request the current drawing from IMC.

Standard Package

1550E Indexer with

- KH127 Gear Reducer with Brake-motor
- Double Extended Camshaft (Input shaft)
- Center Thru Hole (470 mm)
- Cycle Cam & limit Switch
- Right Hand Cam

Optional Accessories

- Left Hand Cam
- Relief in Dwell for Shot-Pin applications
- Dual Cam & limit Switch
- KH157 Gear Reducer with Brake-motor
- Digi-Dog Programmable Rotary Limit Switch
- Stationary Center Post
- Visual Disk Dwell Indicator

2050E

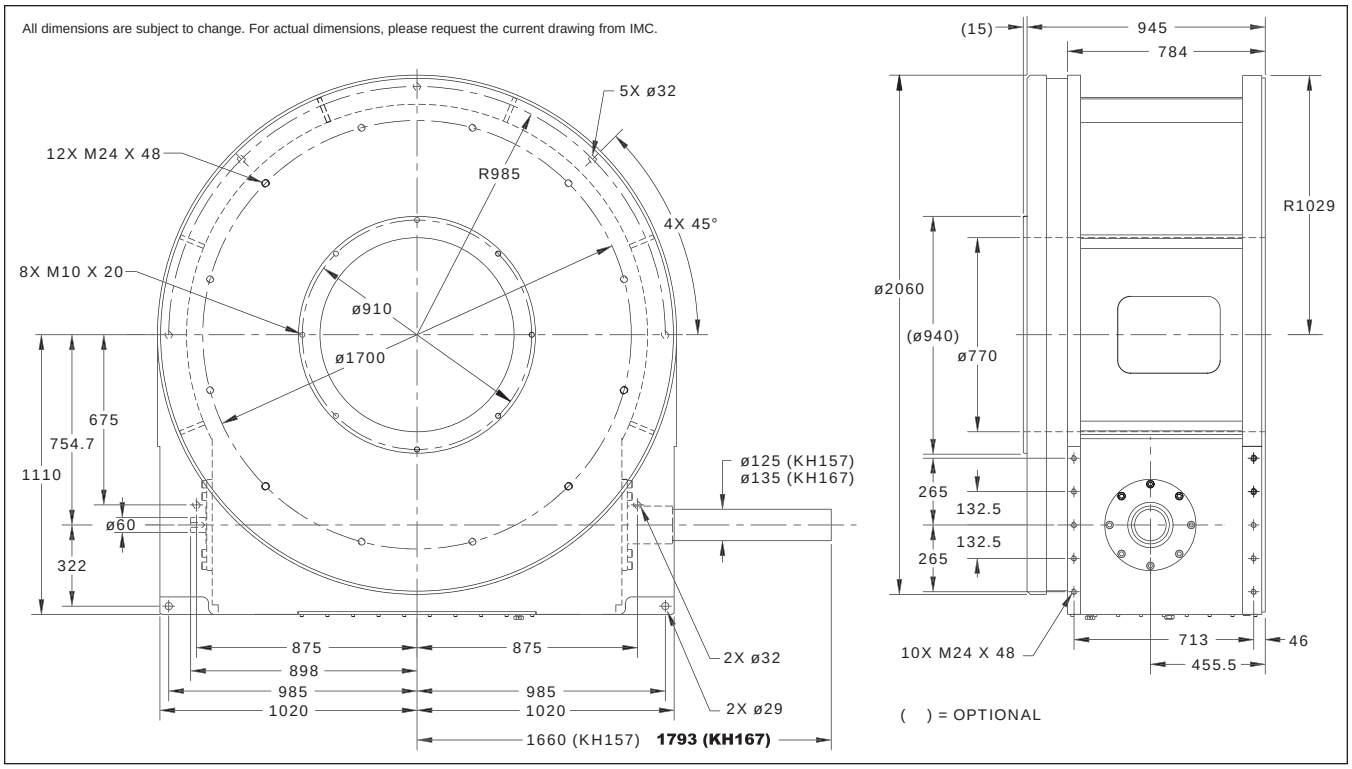

2050E Indexer Capacities

Stops (S)	Index Period (β)	Motion	B_{10} Capacity at 50 RPM (in-lb)	Internal Inertia (lb-in^2)	Model
2	330	msc.50	1,013,191	4,440,300	2050E2H192-330
3	330	msc.50	1,575,211	4,461,600	2050E3H192-330
	315	msc.50	1,574,746	4,461,600	2050E3H192-315
4	330	ms	1,276,537	4,461,600	2050E4H192-330
6	330	msc.33	2,073,583	4,657,300	2050E6H192-330
8	330	ms	1,995,264	4,592,100	2050E8H192-330
12	330	ms	1,877,020	4,461,600	2050E12H192-330
16	330	ms	2,046,134	4,592,100	2050E16H192-330
24	330	ms	2,139,488	4,592,106	2050E24H192-300 II
32	300	ms	2,619,637	4,592,100	2050E32H192-300 II

Other Motions (stops and index periods) available. Contact your IMC sales representative for more information.

Technical Specifications

Output Load Capacity – loads carried during index

Radial	109,755 lbs
Thrust/Axial	159,960 lbs
Moment	4,342,800 in-lb

Typical Application

Dial Diameter:	160 in. to 320 in.
Accuracy	±16 arcsec / ±.0031" at 40" radius
Repeatability	±4 arcsec / ±.0008" at 40" radius

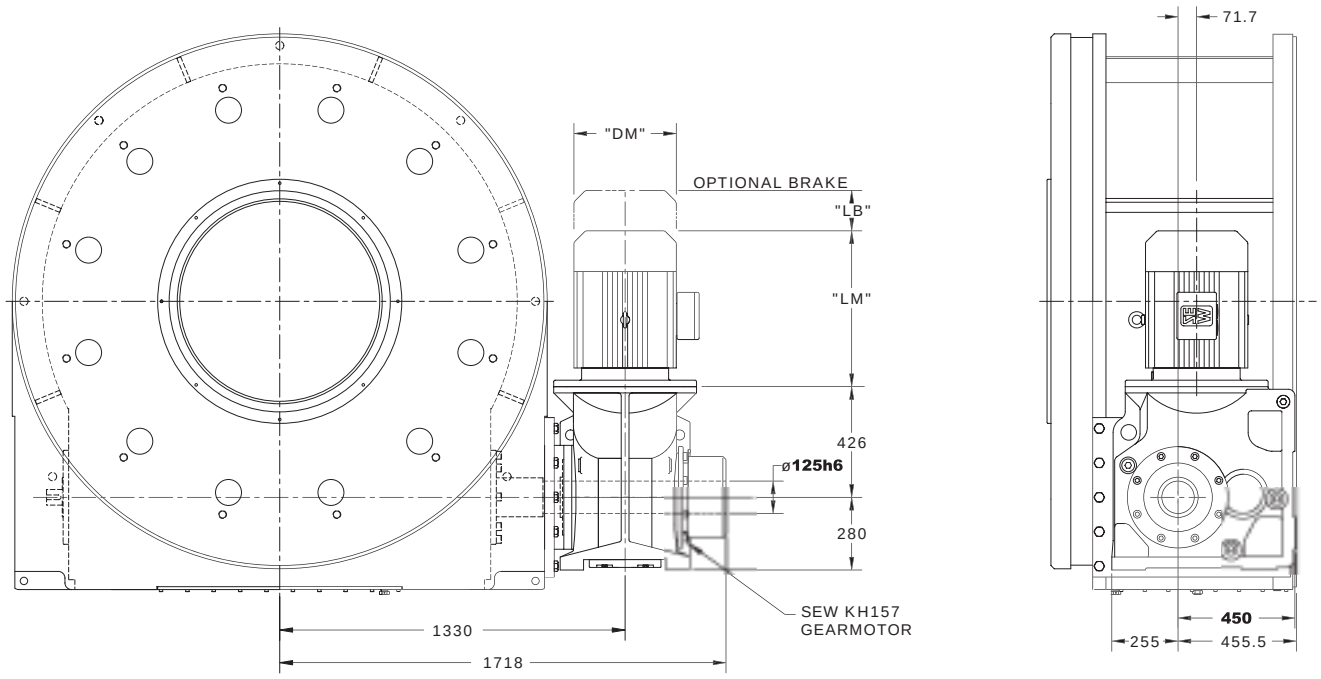

MOTOR FRAME	"DM"	"LM"	"LB"
IEC132ML	275	462	112
IEC160M	275	441	112
IEC160L	331	488	156
IEC180	331	560	156
IEC200	394	608	156
IEC225	394	690	156

All dimensions are subject to change. For actual dimensions, please request the current drawing from IMC.

Standard Package

2050E Indexer with

- KH157 Gear Reducer with Brake-motor
- Double Extended Camshaft (Input shaft)
- Center Thru Hole (770 mm)
- Cycle Cam & limit Switch
- Right Hand Cam

Optional Accessories

- Left Hand Cam
- Relief in Dwell for Shot-Pin applications
- Dual Cam & limit Switch
- KH167 Gear Reducer with Brake-motor
- Digi-Dog Programmable Rotary Limit Switch
- Stationary Center Post
- Visual Disk Dwell Indicator

Indexer Ordering Procedure

1. Model
2. Cam Lead (Helix)
   - Right Hand (Standard)
   - Left Hand

NOTE: Input may rotate in either direction to achieve desired direction of output rotation.

RIGHT HAND CAM LEAD

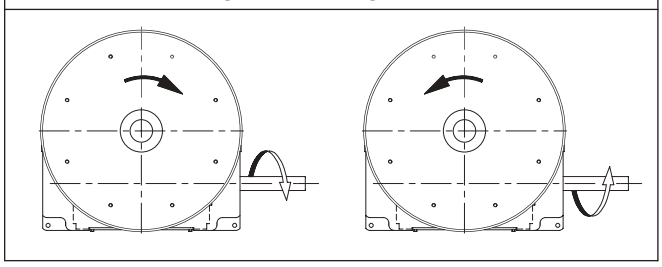

LEFT HAND CAM LEAD

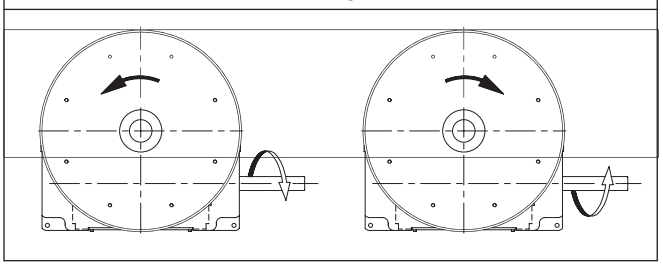

G

Reducer Ordering Procedure

1. Model
2. Ratio
3. Mounting
   - Mounting Position C or D
   - Mounted on Indexer Side 1 or Side 2
4. Input Shaft Orientation
   - Left or Right

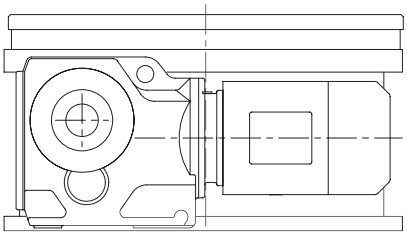

C-1-LH

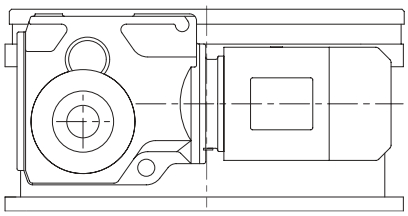

D-1-RH

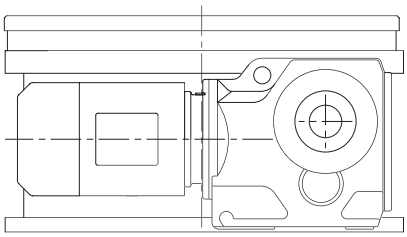

C-2-RH

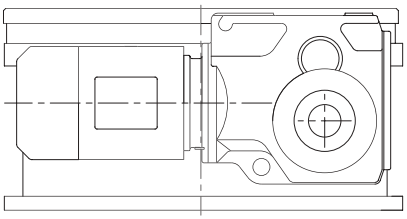

D-2-LH

Output and Input Overload Clutches

IMC
INDUSTRIAL MOTION CONTROL, LLC.
CAMCO FERGUSON

Features

IMC **Output Overload** and **Rite-Torq® Clutches** are designed to protect your indexing equipment from costly downtime due to overload or jam conditions by quickly disengaging the drive system.

- Easily Mounted to IMC index drives
- Single Position reset to maintain accuracy and machine timing
- Precision hardened and ground plungers and drive plate
- Overload Detector plate provides actuation for overload detector switch
- Variety of Models for all applications
- Standard & custom torque settings
  — Rite-Torq clutches are fully adjustable within a range
- Rigid, Backlash-Free design

IMC **Input Overload Clutches (IOC)** are used when an Output Overload Clutch cannot be used such as when the indexer is lifting a weight. IOC's have an adjustable torque setting and reset when the overload condition is removed.

“D” Clutch: Flange-Mounted Body

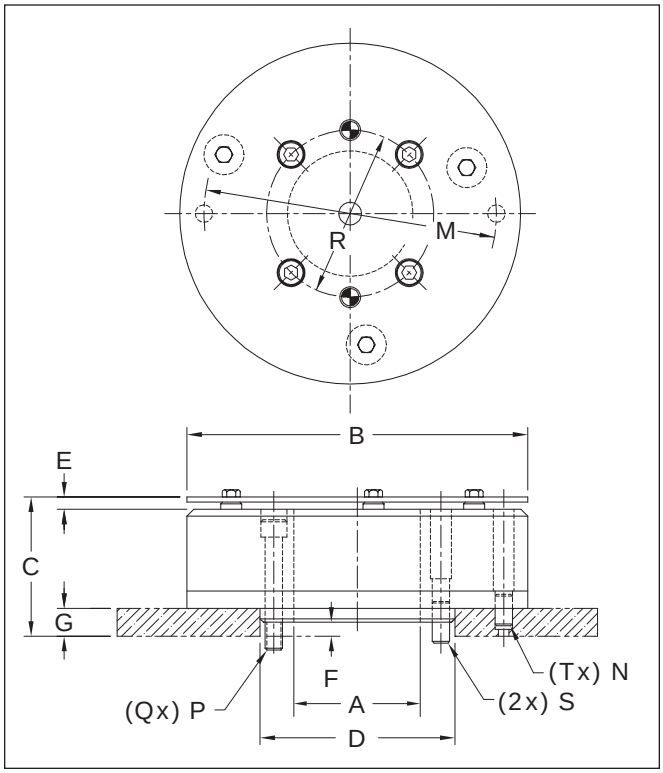

“D” Type clutches are designed to mount on IMC Index Drives with large dial mounting surfaces. The dial plate rests directly on the index drive output flange, providing stability and accuracy.

All dimensions are subject to change. For actual dimensions, please request the current drawing from IMC.

Dimensions – D-Type Clutch

Model	A	B	C	D	E	F	G	M	N	P	Q	R	S	T
2.8D	1.00	5.12	2.50	2.500	0.22*	0.250	0.500	4.250	0.312	.312-18	4	2.00	0.31	2
4.0D	2.25	6.12	2.50	3.500	0.22*	0.250	0.500	5.250	0.312	.312-18	4	3.00	0.31	2
7.8D	3.41	8.50	2.88	5.000	0.25**	0.188	0.750	6.750	0.500	.500-20	4	4.25	0.50	2
18D	2.62	10.25	4.53	5.000	0.31***	0.188	1.000	8.250	0.625	.500-20	4	4.25	0.50	2
31D	5.25	14.50	4.03	9.000	0.34***	-	1.000	11.750	0.750	.500-20	6	8.25	0.50	4
32D	5.25	14.50	4.03	9.000	0.34***	-	1.000	11.750	0.750	.500-13	6	8.25	0.50	4
61D	7.25	18.38	5.40	11.000	0.34***	-	1.250	16.000	0.750	.625-11	8	10.00	.625 (4)	4

* Dimension increases .06 during overload
** Dimension increases .09 during overload
*** Dimension increases .12 during overload

Specifications – D-Type Clutch

Model	Internal Inertia (lb-in)	Torque Setting (in-lb)	Index Drive
2.8D	29	400 480 700 850 1100 1300 1800 2200 3100	425RD
4.0D	69	420 620 750 1150 1750 2950 4000	601RDM
7.8D	266	1400 1700 2600 3200 4200 5000 7200 10000	902RDM 663RAD 900RAD
18D	743	5000 7000 7800 10,000 13000 15000 20000 25000	900RAD
31D	2910	8500 13000 20000 31000	1200RAD
32D	2910	8500 13000 20000 31000	1305RDM
61D	4900	23000 36000 44000 50000 60000	1800RDM

"D-SA" Clutch: Super-Accurate Flange-Mounted Body

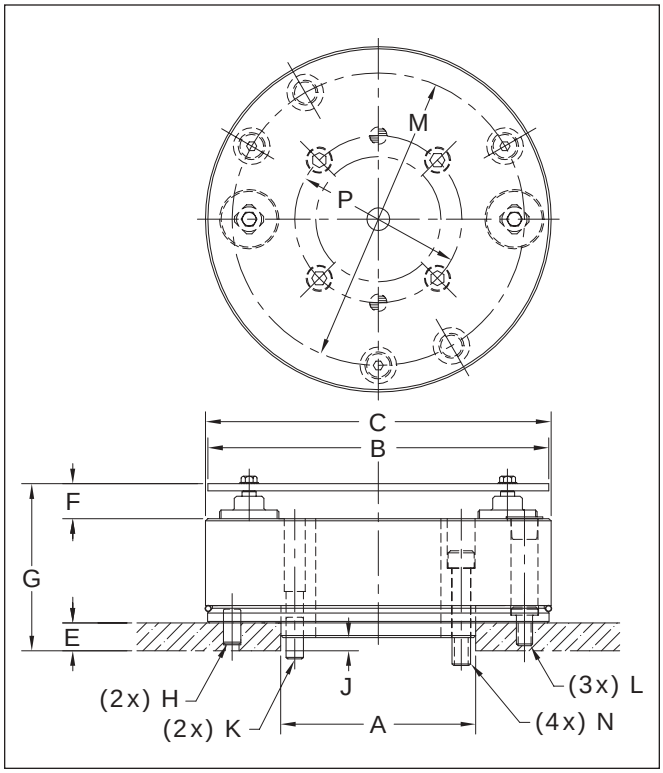

IMC's Super Accurate "D-SA" clutches are designed to mount on IMC Index Drives which feature large dial mounting surfaces. Using externally mounted torque nuts, these clutches are easily adjustable throughout their entire torque range. "D-SA" clutches will re-engage to within ±10 arc seconds of their original setting and may be used in wash down applications, making them ideal for use in the most demanding high-performance applications.

All dimensions are subject to change. For actual dimensions, please request the current drawing from IMC.

Dimensions – D-SA Type Clutch

Model	A	B	C	E	F	G	H	J	K	L	M	N	P
2.8D-SA	2.5000	5.12	5.20	0.500	.62*	3.00	0.313	0.250	0.3125	.312-18	4.250	.312-24	2.000
4.0D-SA	3.5000	6.12	6.20	0.500	.62*	3.00	0.313	0.250	0.3125	.312-18	5.250	.312-24	3.000
7.8D-SA	5.0000	8.50	8.56	0.750	.58**	3.21	0.500	0.188	0.5	.375-16	6.750	.500-20	4.250

* F Dimension increases .06 during overload
** F Dimension increases .07 during overload

Specifications – D-SA Type Clutch

Model	Internal Inertia (lb-in)	Torque Setting (in-lb)	Index Drive
2.8D	29	Fully adjustable: 500 in-lb to 3,100 in-lb	425RD
4.0D	69	Fully adjustable: 750 in-lb to 4,000 in-lb	601RDM
7.8D	266	Fully adjustable: 2,600 in-lb to 10,000 in-lb	902RDM 663RAD 900RAD

“F” Clutch: Flange to Flange Mounting

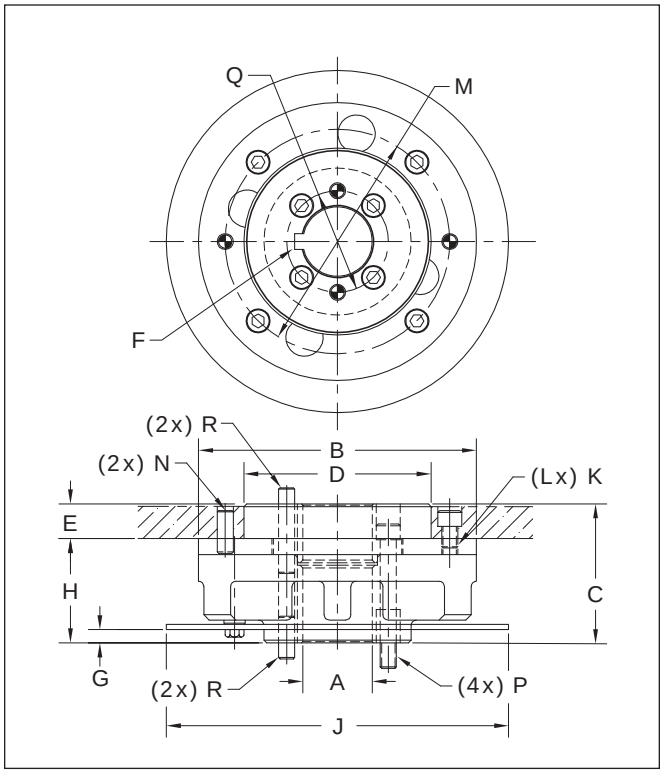

IMC “F” type clutches are designed to mount on IMC index drives. These clutches will flange mount to the output shaft, providing a rigid, compact, and accurate connection with the driven member.

All dimensions are subject to change. For actual dimensions, please request the current drawing from IMC.

Dimensions – F-Type Clutch

Model	A	B	C	D	E	F	G	H	J	K	L	M	N	P	Q	R
.39F	0.6250	3.38	2.19	2.375	0.41	0.1875	.22†	1.78	4.75	10-32	4	2.875	0.250	10-32	1.25	0.25
M40F*	17	86	56	60.3	10.8	-	5.5††††	45.2	120	M5	4	73	6	M4	28	4
M50F*	20	86	56	60.3	10.8	-	5.5††††	45.2	150	M5	4	73	6	M5	35	5
M70F*	35	130	70.6	90	14.3	-	5.5††††	56.3	165	M8	4	110	8	M6	55	6
M80F*	45	130	70.6	90	14.3	-	5.5††††	56.3	203	M8	4	110	8	M8	55	8
2.3F	1.0000**	5.12	2.78	3.500	0.56	0.250	.22†	2.22	6.50	5/16-24	4	4.25	0.312	5/16-24	2.00	0.31
6.0F	1.6250	6.50	3.25	4.375	0.81	0.375	.31††	2.44	8.00	3/8-24	4	5.25	0.375	3/8-24	2.38	0.38
11F	2.0000	8.50	3.72	5.750	0.81	0.500	.38††	2.91	10.00	3/8-24	4	6.75	0.500	3/8-24	3.25	0.38
25F	2.7500	10.25	4.97	7.125	1.06	0.625	.38†††	3.91	12.00	1/2-13	6	8.25	0.625	1/2-20	4.25	0.63
41F	3.0000	15.00	5.50	10.000	1.06	0.750	.41†††	4.44	17.00	5/8-18	6	11.75	0.750	3/4-10	5.50	0.65

* Dimensions in millimeters
** Also 1.2500

† Dimension decreases .06 during overload
†† Dimension decreases .09 during overload
††† Dimension decreases .12 during overload
†††† Dimension decreases 1.5 mm during overload

Specifications – F-Type Clutch

Model	Internal Inertia (lb-in)	Torque Setting (in-lb)	Index Drive
.39F	5	160 210 270 320 390	250P 301RA
M40F	5	160 210 270	40RGS
M50F	5	270 320 390	50RGS
M70F	32	400 600 700 850 1000	70RGS
M80F	32	400 600 700 850 1000 1300	80RGS
2.3F	32	400 600 700 850 1000 1300 1800 2000 230	387P 350RGS/RGD 400RA 401RA
6.0F	87	670 825 1100 1400 1700 2000 2300 2500 3000 3800 4000 5000 6000	512P 512RA
11F	340	2300 4000 6000 8500 11000	662P 662RA 663RAD
25F	842	5000 7000 10000 13000 15000 20000 25000	900RAD 900P
41F	5390	13000 21000 30000 41000	1200P

IMC “F” type clutches may be mounted in two positions, “A” or “B.” Mounting “B” provides greater rigidity and overhung loading and should be used whenever high loads are exerted on driven members.

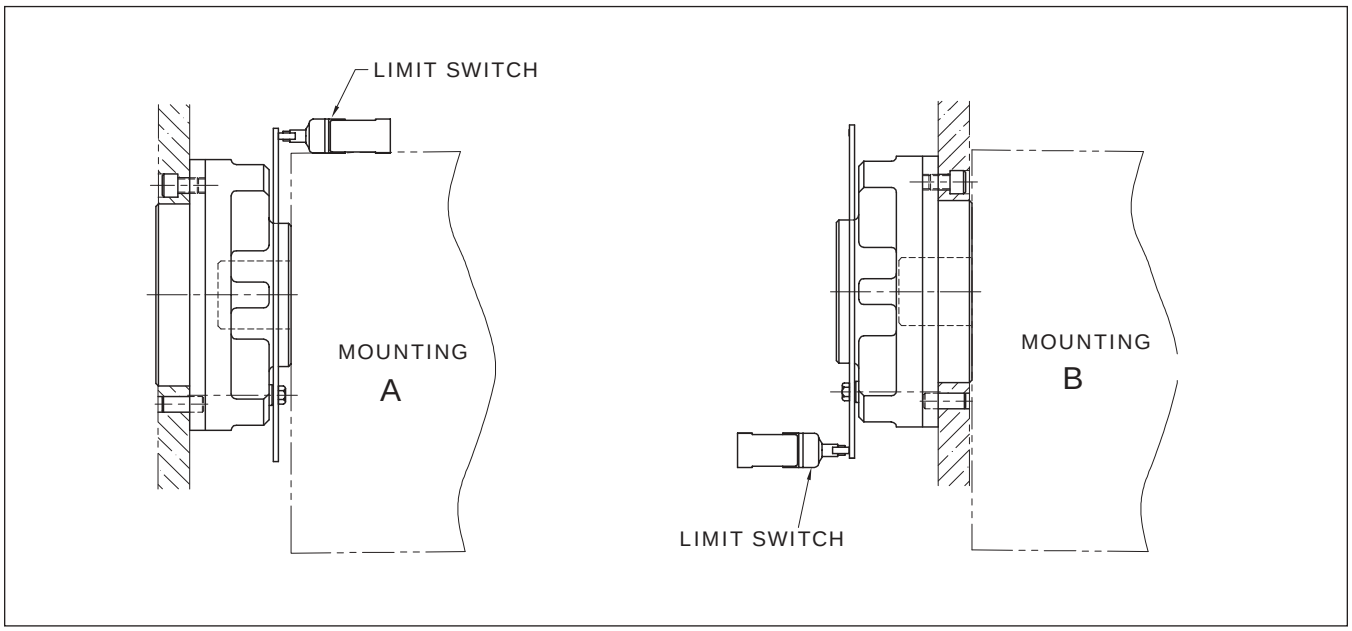

"S" Clutch: Shaft to Flange Mounting

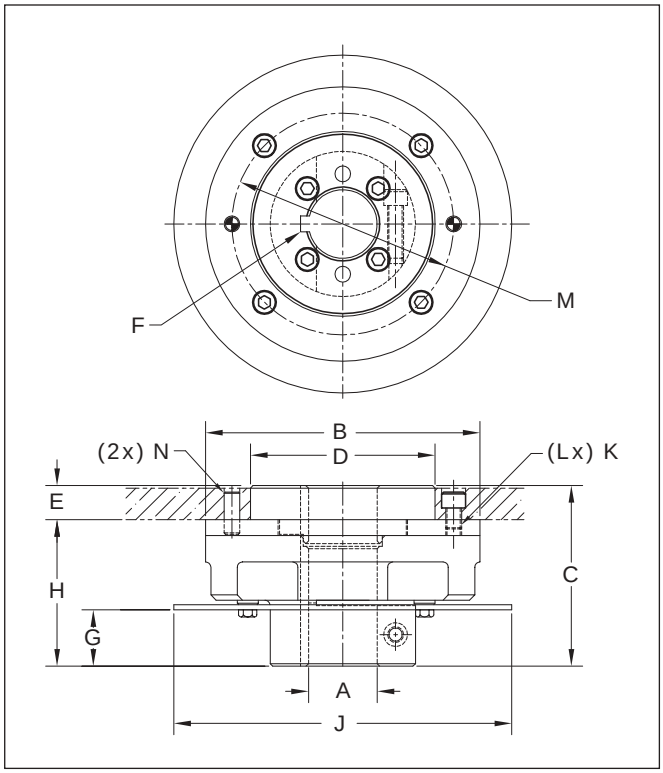

IMC "S" type clutches are designed to mount on IMC index drives without output flanges. The combination of key and clamped hub design provides a rigid and backlash-free connection.

All dimensions are subject to change. For actual dimensions, please request the current drawing from IMC.

Dimensions – S-Type Clutch

Model	A	B	C	D	E	F	G	H	J	K	L	M	N
.39S	0.6250	3.38	2.63	2.375	0.40	0.187	.66†	2.22	4.75	10-32	4	2.88	0.250
M40S*	16	86	67	60.3	10.6	5	17††††	56.4	120	M5	4	73	6
M50S*	20	86	67	60.3	10.6	6	17††††	56.4	150	M5	4	73	6
M70S*	25	130	84	90	14	8	19††††	70	165	M8	4	110	8
M80S*	30	130	84	90	14	8	19††††	70	203	M8	4	110	8
2.3S	1.0000**	5.12	3.31	3.500	0.56	0.250	.75†	2.75	6.50	5/16-24	4	4.25	0.312
6.0S	1.6250	6.50	4.28	4.375	0.81	0.375	1.34††	3.47	8.00	3/8-24	4	5.25	0.375
11S	2.0000	8.50	5.00	5.750	0.81	0.500	1.69††	4.19	10.00	3/8-24	4	6.75	0.500
25S	2.5000	10.25	6.25	7.125	1.06	0.625	1.66†††	5.19	12.00	1/2-13	6	8.25	0.625
41S	3.0000	15.00	7.56	10.000	1.06	0.750	2.47†††	6.50	17.00	5/8-18	6	11.75	0.750

* Dimensions in millimeters
** Also 1.2500

† Dimension decreases .06 during overload
†† Dimension decreases .09 during overload
††† Dimension decreases .12 during overload
†††† Dimension decreases 1.5 mm during overload

Specifications – S-Type Clutch

Model	Internal Inertia (lb-in)	Torque Setting (in-lb)	Index Drive
.39S	5	160 210 270 320 390	250P 301RA
M40S	5	160 210 270	40RGS
M50S	5	270 320 390	50RGS
M70S	31	400 600 700 850 1000	70RGS
M80S	31	400 600 700 850 1000 1300	80RGS
2.3S	31	400 600 700 850 1000 1300 1800 2000 230	387P 350RGS/RGD 400RA 401RA
6.0S	83	670 825 1100 1400 1700 2000 2300 2500 3000 3800 4000 5000 6000	512P 512RA
11S	320	2300 4000 6000 8500 11000	500RGD/RGS 662RA 662P
25S	803	5000 7000 10000 13000 15000 20000 25000	700RGS
41S	4750	13000 21000 30000 41000	1200P

IMC “S” type clutches may be mounted two positions, “A” or “B.” Mounting “B” provides greater rigidity and overhung loading and should be used whenever high loads are exerted on driven members.

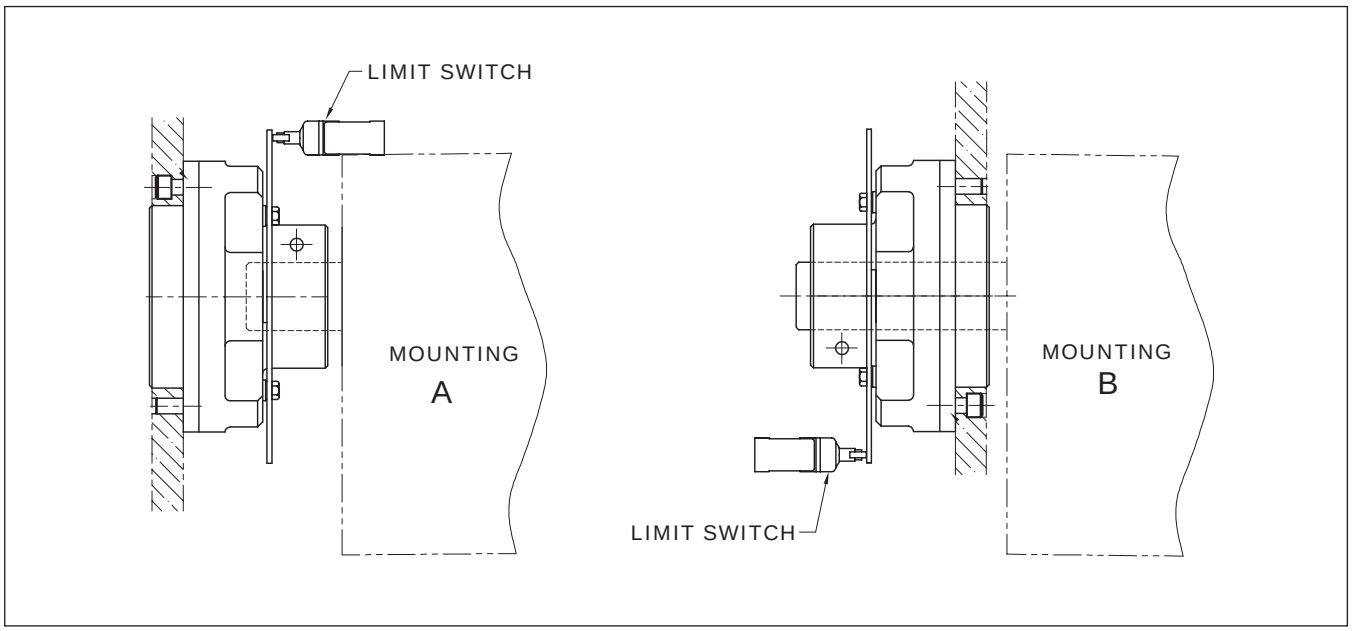

“FC” Clutch: Flange to Shaft Mounting

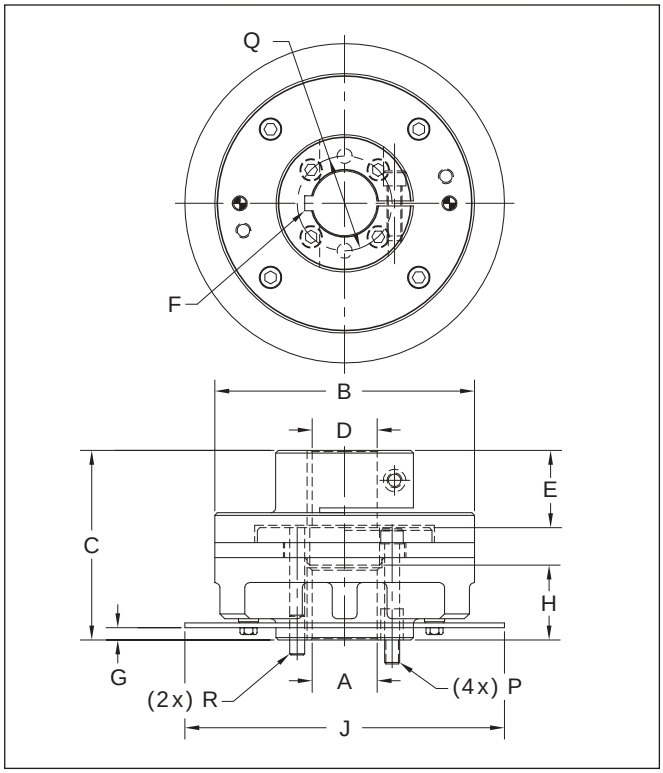

IMC “FC” type clutches are designed to mount on IMC index drives. These clutches will flange mount to the output shaft, providing a rigid, compact and accurate connection.

All dimensions are subject to change. For actual dimensions, please request the current drawing from IMC.

Dimensions – FC-Type Clutch

Model	A	B	C	D	E	F	G	H	J	P	Q	R
.39FC	0.6250	3.38	3.03	0.625	1.06	0.187	.22†	1.41	4.75	10-32	1.25	0.25
M40FC*	17	86	77	16	27	5	5.5††††	36	120	M4	28	4
M50FC*	20	86	77	20	27	6	5.5††††	36	150	M5	35	5
M70FC*	35	130	97	25	31	8	5.5††††	44	165	(6) M6	55	6
M80FC*	45	130	97	30	31	8	5.5††††	44	165	M8	55	8
2.3FC	1.0000**	5.12	3.81	1.000	1.28	0.250	.22†	1.75	6.50	5/16-24	2.00	0.31
6.0FC	1.6250	6.50	4.75	1.625	1.94	0.375	.31††	1.88	8.00	3/8-24	2.38	0.38
11FC	2.0000	8.50	5.72	2.000	2.38	0.500	.38††	2.25	10.00	3/8-24	3.25	0.38
25FC	2.5000	10.25	6.97	2.500	2.50	0.625	.38†††	3.09	12.00	1/2-20	4.25	0.50
41FC	3.0000	15.00	8.81	3.000	3.63	0.750	.41†††	3.38	17.00	3/4-10	5.50	0.62

* Dimensions in millimeters
** Also 1.2500

† Dimension decreases .06 during overload
†† Dimension decreases .09 during overload
††† Dimension decreases .12 during overload
†††† Dimension decreases 1.5 mm during overload

Specifications – FC-Type Clutch

Model	Internal Inertia (lb-in)	Torque Setting (in-lb)	Index Drive
.39FC	7	160 210 270 320 390	250P 301RA
M40FC	7	160 210 270	40RGD
M50FC	7	270 320 390	50RGD
M70FC	43	400 600 700 850 1000	70RGD
M80FC	43	400 600 700 850 1000 1300	80RGD
2.3FC	43	400 600 700 850 1000 1300 1800 2000 230	387P 350RGS/RGD 400RA 401RA
6.0FC	118	670 825 1100 1400 1700 2000 2300 2500 3000 3800 4000 5000 6000	512P 512RA
11FC	456	2300 4000 6000 8500 11000	662P 662RA 663RAD
25FC	1130	5000 7000 10000 13000 15000 20000 25000	900P 900RAD
41FC	6940	13000 21000 30000 41000	1200P

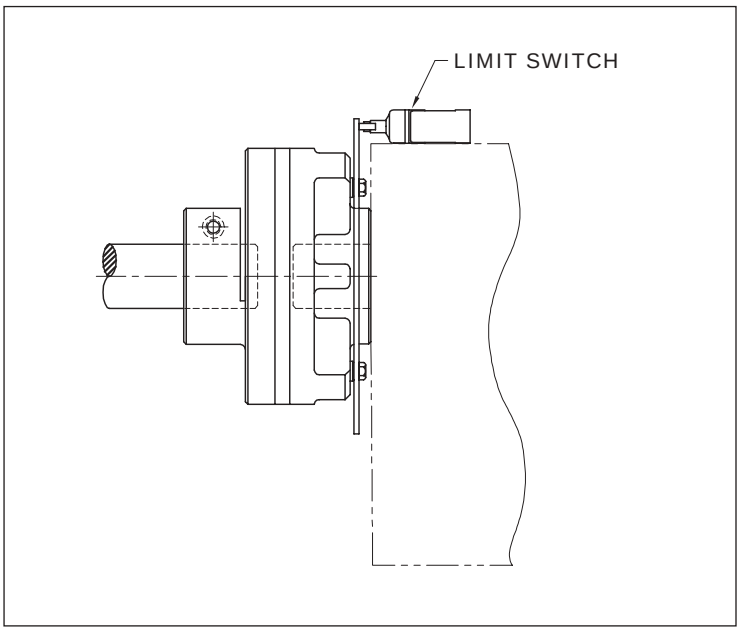

“C” Clutch: Shaft to Shaft Mounting

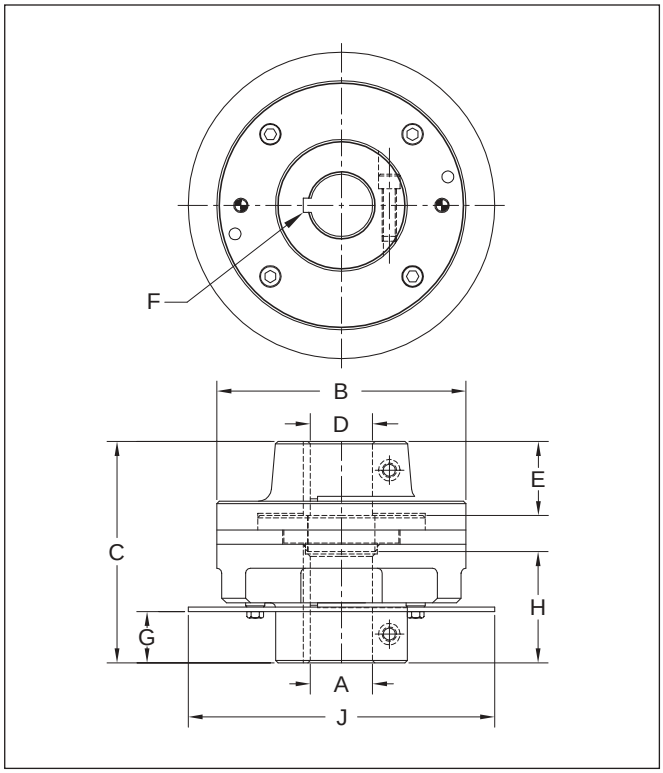

IMC “C” type clutches are designed to mount on IMC index drives without output flanges. These clutches are used whenever a positive connection is required between two shafts.

All dimensions are subject to change. For actual dimensions, please request the current drawing from IMC.

Dimensions – C-Type Clutch

Model	A	B	C	D	E	F	G	H	J
.39C	0.6250	3.38	3.47	0.625	1.06	0.187	.66†	1.84	4.75
M40C*	16	86	88	16	27	5	17††††	47	120
M50C*	20	86	88	20	27	6	17††††	47	150
M70C*	25	130	110	25	31	8	19††††	58	165
M80C*	30	130	110	30	31	8	19††††	58	203
2.3C	1.0000**	5.12	4.34	1.000	1.28	0.250	.75†	2.28	6.50
6.0C	1.6250	6.50	5.78	1.625	1.94	0.375	1.34††	2.91	8.00
11C	2.0000	8.50	7.00	2.000	2.38	0.500	1.69††	3.56	10.00
25C	2.5000	10.25	8.25	2.500	2.50	0.625	1.66†††	4.38	12.00
41C	3.0000	15.00	10.88	3.000	3.63	0.750	2.47†††	5.44	17.00

* Dimensions in millimeters
** Also 1.2500

† Dimension decreases .06 during overload
†† Dimension decreases .09 during overload
††† Dimension decreases .12 during overload
†††† Dimension decreases 1.5 mm during overload

Specifications – C-Type Clutch

Model	Internal Inertia (lb-in)	Torque Setting (in-lb)	Index Drive
.39C	7	160 210 270 320 390	250P 301RA
M40C	7	160 210 270	40RGS
M50C	7	270 320 390	50RGS
M70C	44	400 600 700 850 1000	70RGS
M80C	44	400 600 700 850 1000 1300	80RGS
2.3C	44	400 600 700 850 1000 1300 1800 2000 230	387P 350RGS/RGD 400RA 401RA
6.0C	122	670 825 1100 1400 1700 2000 2300 2500 3000 3800 4000 5000 6000	512P 512RA
11C	476	2300 4000 6000 8500 11000	500RGD/RGS 662P
25C	1169	5000 7000 10000 13000 15000 20000 25000	700RGS
41C	7225	13000 21000 30000 41000	1200P

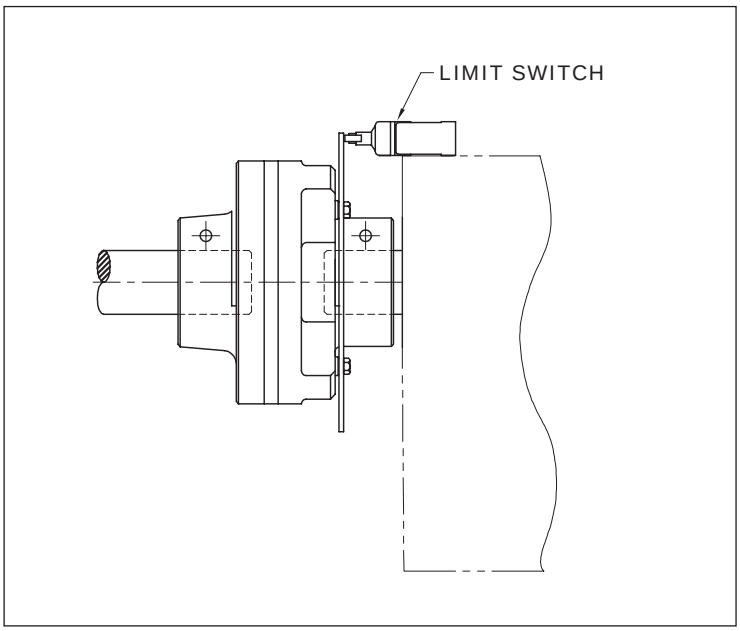

“S-SD” Clutch: Shaft to Flange, Shrink-Disk Mounting

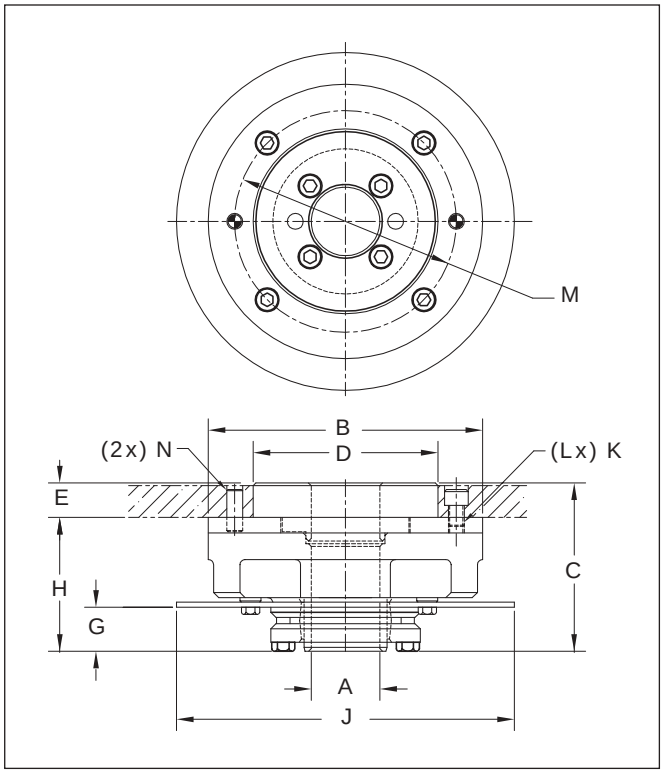

IMC “S-SD” type clutches are designed to mount on IMC index drives without output flanges. The shrink disk design converts clamp loads from multiple high strength locking screws to radial gripping force through the use of circular wedges, providing the highest capacity mechanical interference connection available.

All dimensions are subject to change. For actual dimensions, please request the current drawing from IMC.

Dimensions – S-SD-Type Clutch

Model	A	B	C	D	E	G	H	J	K	L	M	N
.39S-SD	0.6250	3.38	2.62	2.375	0.40	.66†	2.22	4.75	10-32	4	2.88	0.250
2.3S-SD	1.0000	5.12	3.31	3.500	0.56	.75†	2.75	6.50	5/16-24	4	4.25	0.312
6.0S-SD	1.6250	6.50	3.98	4.375	0.81	1.04††	3.17	8.00	3/8-24	4	5.25	0.375
11S-SD	2.0000	8.50	4.38	5.750	0.82	1.06††	3.56	10.00	3/8-24	4	6.75	0.500
25S-SD	2.5000	10.25	5.75	7.125	1.06	1.16†††	4.69	12.00	1/2-13	6	8.25	0.625

* Dimensions in millimeters

† Dimension decreases .06 during overload
†† Dimension decreases .09 during overload
††† Dimension decreases .12 during overload
†††† Dimension decreases 1.5 mm during overload

Specifications – S-SD-Type Clutch			
Model	**Internal Inertia (lb-in)**	**Torque Setting (in-lb)**	**Index Drive**
.39S-SD	5	160 210 270 320 390	250P 301RA
2.3S-SD	32	400 600 700 850 1000 1300 1800 2000 230	387P 350RGS/RGD 400RA 401RA
6.0S-SD	87	670 825 1100 1400 1700 2000 2300 2500 3000 3800 4000 5000 6000	512P 512RA
11S-SD	340	2300 4000 6000 8500 11000	500RGD/RGS 662P
25S-SD	842	5000 7000 10000 13000 15000 20000 25000	700RGS 900P

IMC 'S-SD' type clutches may be mounted in two positions, "A" or "B." Mounting "B" provides greater rigidity and overhung loading and should be used whenever high loads are exerted on driven members.

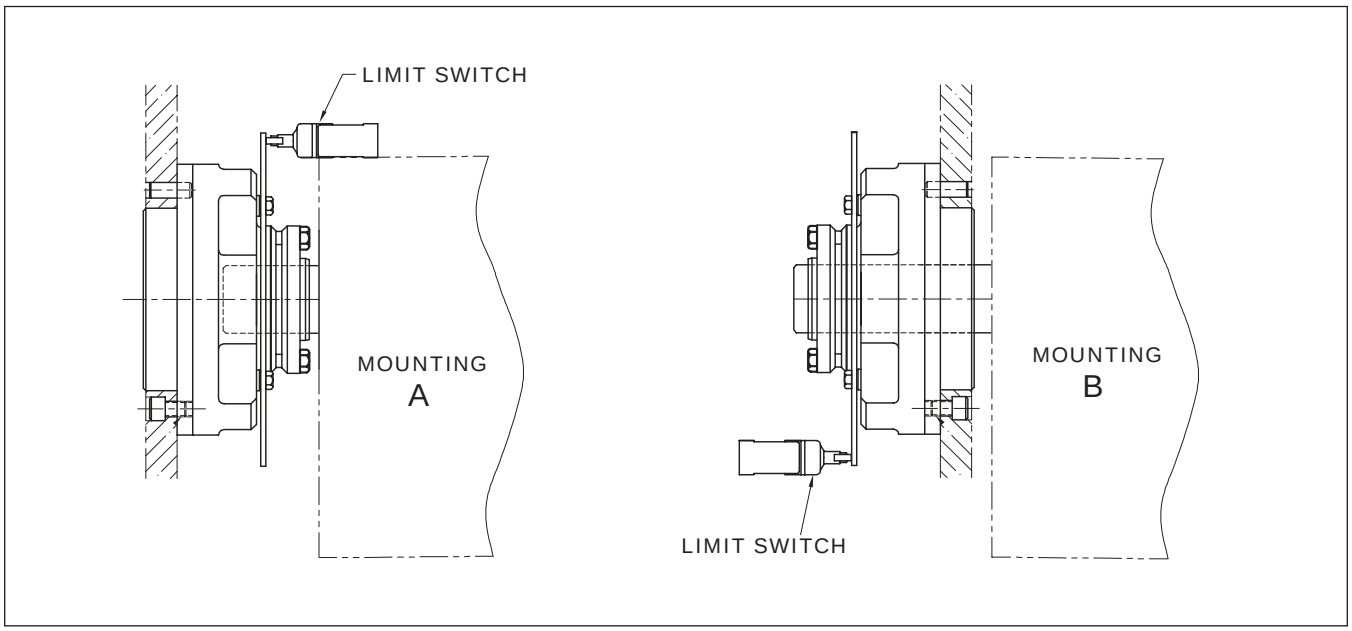

“FC-SD” Clutch: Flange to Shaft, Shrink-Disk Mounting

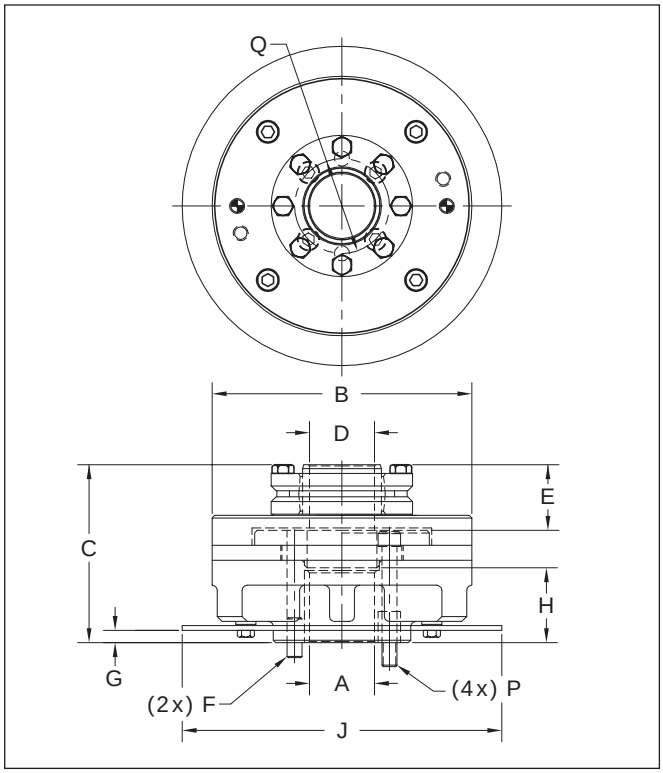

IMC “FC-SD” type clutches are designed to mount on IMC index drives with output flanges. The shrink disk design converts clamp loads from multiple high strength locking screws to radial gripping force through the use of circular wedges, providing the highest capacity mechanical interference connection available.

All dimensions are subject to change. For actual dimensions, please request the current drawing from IMC.

Dimensions – FC-SD-Type Clutch

Model	A	B	C	D	E	F	G	H	J	P	Q
.39FC-SD	0.6250	3.38	3.00	0.625	1.03	0.25	.22†	1.41	4.75	10-32	1.25
2.3FC-SD	1.0000	5.12	3.81	1.000	1.27	0.31	.22†	1.75	6.50	5/16-24	2.00
6.0FC-SD	1.6250	6.50	4.46	1.625	1.64	0.38	.31††	1.88	8.00	3/8-24	2.38
11FC-SD	2.0000	8.50	5.06	2.000	1.75	0.38	.38††	2.25	10.00	3/8-24	3.25
25FC-SD	2.5000	10.25	6.50	2.500	2.00	0.50	.38†††	3.09	12.00	1/2-20	4.25

* Dimensions in millimeters

† Dimension decreases .06 during overload
†† Dimension decreases .09 during overload
††† Dimension decreases .12 during overload
†††† Dimension decreases 1.5 mm during overload

Specifications – FC-SD-Type Clutch

Model	Internal Inertia (lb-in)	Torque Setting (in-lb)	Index Drive
.39FC-SD	7	160 210 270 320 390	250P 301RA
2.3FC-SD	43	400 600 700 850 1000 1300 1800 2000 230	387P 350RGS/RGD 400RA 401RA
6.0FC-SD	118	670 825 1100 1400 1700 2000 2300 2500 3000 3800 4000 5000 6000	512P 512RA
11FC-SD	456	2300 4000 6000 8500 11000	500RGD/RGS 662P 662RA
25FC-SD	1130	5000 7000 10000 13000 15000 20000 25000	700RGS 900P 900RAD

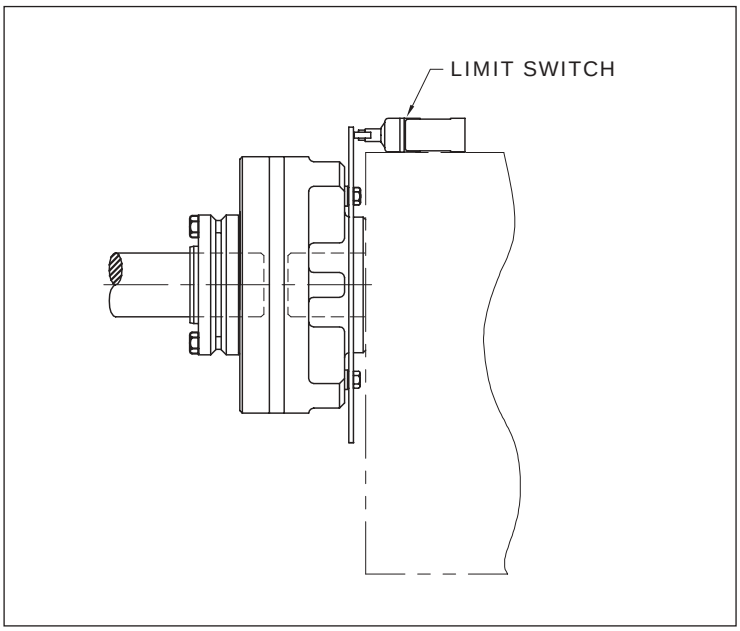

“C-SD” Clutch: Shaft to Shaft, Shrink-Disk Mounting

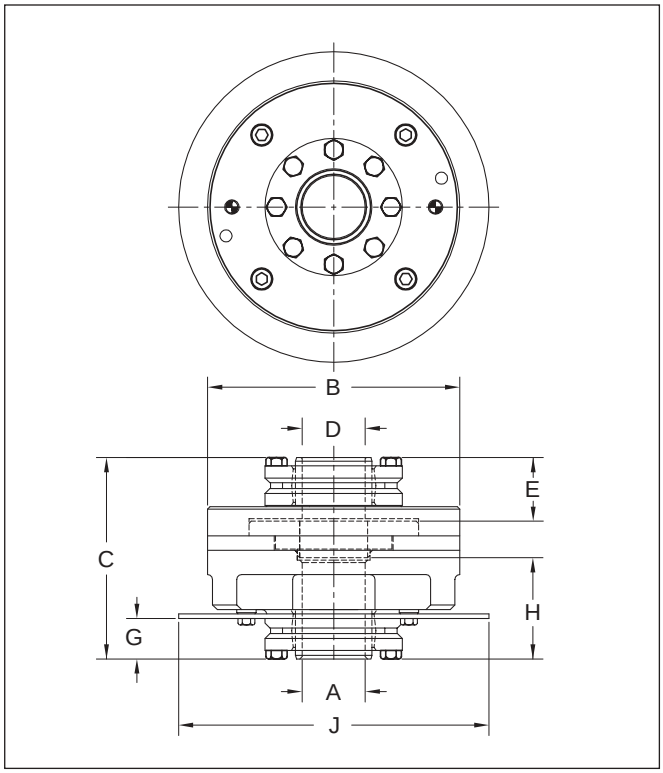

IMC “C-SD” type clutches are designed to mount on IMC index drives without output flanges. The shrink disk design converts clamp loads from multiple high strength locking screws to radial gripping force through the use of circular wedges, providing the highest capacity mechanical interference connection available.

All dimensions are subject to change. For actual dimensions, please request the current drawing from IMC.

Dimensions – C-SD-Type Clutch

Model	A	B	C	D	E	G	H	J
.39C-SD	0.6250	3.38	3.44	0.625	1.03	.66†	1.84	4.75
2.3C-SD	1.0000	5.12	4.34	1.000	1.28	.75†	2.28	6.50
6.0C-SD	1.6250	6.50	5.19	1.625	1.64	1.04††	2.61	8.00
11C-SD	2.0000	8.50	5.75	2.000	1.75	1.06††	2.93	10.00
25C-SD	2.5000	10.25	7.31	2.500	2.00	1.16†††	3.88	12.00

* Dimensions in millimeters

† Dimension decreases .06 during overload
†† Dimension decreases .09 during overload
††† Dimension decreases .12 during overload
†††† Dimension decreases 1.5 mm during overload

Specifications – C-SD-Type Clutch

Model	Internal Inertia (lb-in)	Torque Setting (in-lb)	Index Drive
.39C-SD	7	160 210 270 320 390	250P 301RA
2.3C-SD	44	400 600 700 850 1000 1300 1800 2000 230	387P 350RGS/RGD 400RA 401RA
6.0C-SD	122	670 825 1100 1400 1700 2000 2300 2500 3000 3800 4000 5000 6000	512P 512RA
11C-SD	476	2300 4000 6000 8500 11000	500RGD/RGS 662P 662RA
25C-SD	1169	5000 7000 10000 13000 15000 20000 25000	700RGS 900P 900RAD

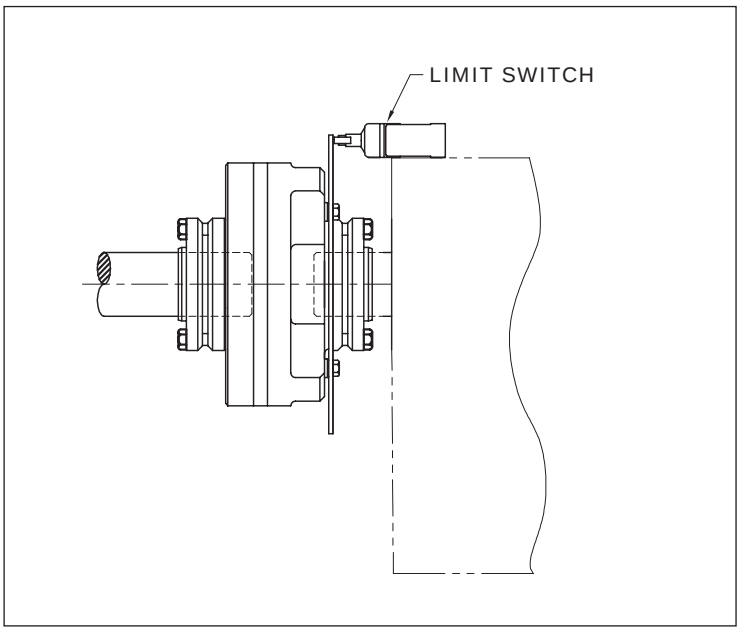

RITE-TORQ® "S/S" Clutch: Shaft to Shaft Mounting

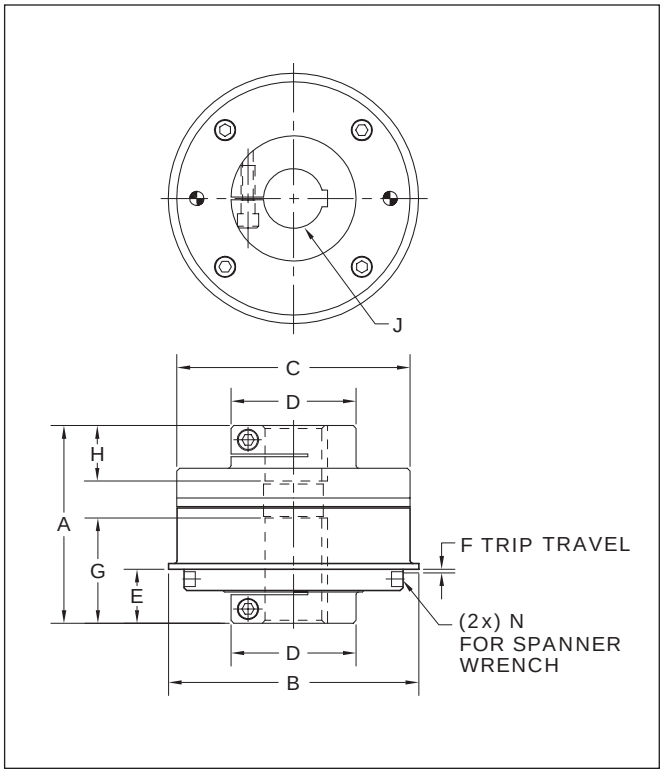

IMC "S/S" type clutches are designed to mount on IMC index drives without output flanges. The combination of key and clamped hub design provides a rigid and backlash-free connection.

All dimensions are subject to change. For actual dimensions, please request the current drawing from IMC.

Dimensions – RITE-TORQ® S/S Clutch

Model	A	B	C	D	E	F	G	H	J	N
RT3-S/S	3.46	3.75	3.37	1.75	1.00	0.06	1.86	1.00	.4375 - .7500	0.25
RT5-S/S	4.34	5.50	5.12	2.75	1.19	0.08	2.31	1.22	.6250 - 1.2500	0.31
RT6-S/S	6.68	7.00	6.50	3.75	1.84	0.09	3.19	2.06	1.0000 - 2.0000	0.31
RT8-S/S	7.00	9.00	8.50	5.00	2.06	0.11	3.50	2.00	1.5000 - 2.5000	0.31

Specifications – RITE-TORQ® S/S Clutch

Model	Internal Inertia (lb-in)	Adjustable Torque Setting Ranges (in-lb)	Index Drive
RT3-S/S	9	100-175, 175-275, 250-350, 325-500	P325
RT5-S/S	54	500-850, 800-1700, 1600-3000	P400
RT6-S/S	170	1000-2700, 2500-5000, 4000-8500	P500
RT8-S/S	650	4000-9500, 6000-15,500	

RITE-TORQ® "F/F" Clutch: Flange to Flange Mounting

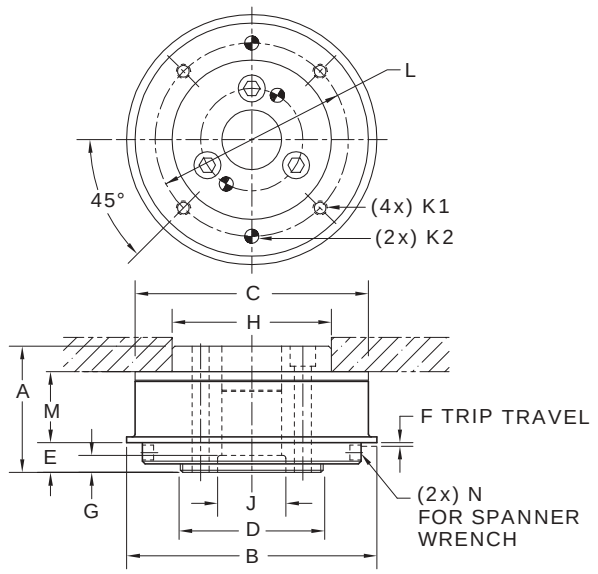

IMC "F/F" type clutches are designed to mount on IMC index drives. These clutches will flange mount to the output shaft, providing a rigid, compact, and accurate connection with the driven member.

All dimensions are subject to change. For actual dimensions, please request the current drawing from IMC.

Dimensions – RITE-TORQ® F/F Clutch

Model	A	B	C	D	E	F	G	H	J
RT3-F/F	2.19	3.75	3.37	2.12	0.58	0.06	0.25	2.373/2.372	.788/.787
RT5-F/F	2.78	5.50	5.13	3.12	0.66	0.08	0.38	3.498/3.497	1.501/1.50
RT6-F/F	3.75	7.00	6.50	4.12	0.69	0.09	0.38	4.623/4.622	2.501/2.500
RT8-F/F	4.09	9.00	8.50	5.62	0.88	0.11	0.38	6.248/6.247	3.001/3.000

Model	K1	K2	L	M	N
RT3-F/F	10-32 X 1/4 DP	1/4 Dowel X 1/4 DP	2.88	1.20	0.25
RT5-F/F	5/16-18 X 5/16 DP	5/16 Dowel X 5/16	4.25	1.56	0.31
RT6-F/F	3/8-16 X 5/8 DP	3/8 Dowel X 5/8 DP	5.50	2.19	0.31
RT8-F/F	1/2-13 X 3/4 DP	1/2 Dowel X 3/4 DP	7.25	2.41	0.39

Specifications – RITE-TORQ® F/F Clutch

Model	Internal Inertia (lb-in)	Adjustable Torque Setting Ranges (in-lb)	Index Drive
RT3-F/F	7	100-175, 175-275, 250-350, 325-500	FD-100
RT5-F/F	42	500-850, 800-1700, 1600-3000	FD-162
RT6-F/F	118	1000-2700, 2500-5000, 4000-8500	FD-250 FD-300
RT8-F/F	453	4000-9500, 6000-15,500	

All dimensions are subject to change. For actual dimensions, please request the current drawing from IMC.

RITE-TORQ® "F/S" Clutch: Flange to Shaft Mounting

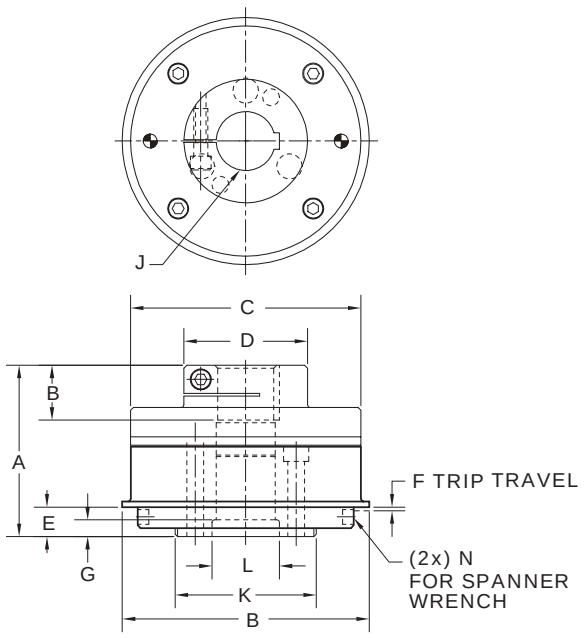

IMC "F/S" type clutches are designed to mount on IMC index drives. These clutches will flange mount to the output shaft, providing a rigid, compact and accurate connection.

All dimensions are subject to change. For actual dimensions, please request the current drawing from IMC.

Dimensions – RITE-TORQ® F/S Clutch

Model	A	B	C	D	E	F	G	H	J	K	L	N
RT3-F/S	3.03	3.75	3.37	1.75	0.58	0.06	0.25	1.00	.4375-.7500	2.12	.788/.787	0.25
RT5-F/S	3.81	5.50	5.13	2.75	0.66	0.08	0.38	1.22	.6250-1.2500	3.12	1.501/1.500	0.31
RT6-F/S	5.56	7.00	6.50	3.75	0.69	0.09	0.38	2.06	1.0000-2.0000	4.12	2.501/2.500	0.31
RT8-F/S	5.81	9.00	8.50	5.00	0.88	0.11	38.00	2.00	1.5000-2.5000	5.62	3.001/3.000	0.39

Specifications – RITE-TORQ® F/S Clutch

Model	Internal Inertia (lb-in)	Adjustable Torque Setting Ranges (in-lb)	Index Drive
RT3-F/S	9	100-175, 175-275, 250-350, 325-500	FD-100
RT5-F/S	54	500-850, 800-1700, 1600-3000	FD-162
RT6-F/S	170	1000-2700, 2500-5000, 4000-8500	FD-250 FD-300
RT8-F/S	630	4000-9500, 6000-15,500	

RITE-TORQ® "S/F" Clutch: Shaft to Flange Mounting

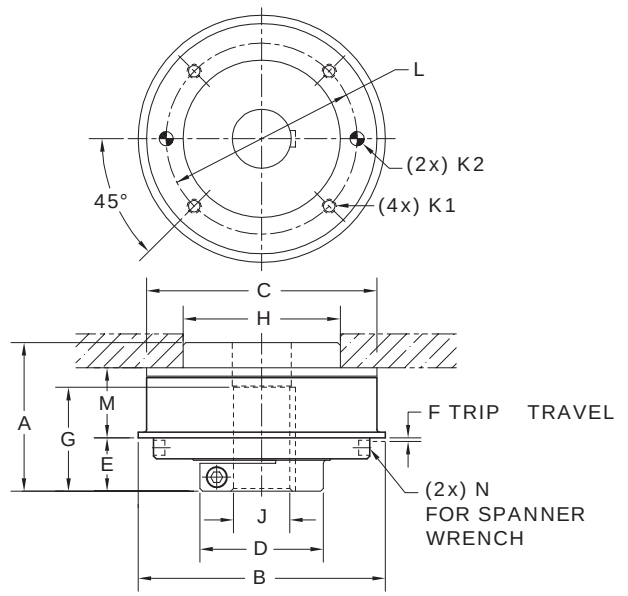

IMC "S/F" type clutches are designed to mount on IMC index drives. These clutches will shaft mount to the indexer output, providing a rigid, compact and accurate connection.

All dimensions are subject to change. For actual dimensions, please request the current drawing from IMC.

Dimensions – RITE-TORQ® S/F Clutch

Model	A	B	C	D	E	F	G	H	J
RT3-S/F	2.63	3.75	3.37	1.75	1.00	0.06	1.86	2.373/2.372	.4375-.7500
RT5-S/F	3.31	5.50	5.13	2.75	1.19	0.08	2.31	3.498/3.497	.6250-1.2500
RT6-S/F	4.87	7.00	6.50	3.75	1.84	0.09	3.19	4.623/4.622	1.0000-2.0000
RT8-S/F	5.28	9.00	8.50	5.00	2.06	0.11	3.50	6.248/6.247	1.5000-2.5000

Model	K1	K2	L	M	N
RT3-S/F	10-32 X 1/4 DP	1/4 Dowel X 1/4 DP	2.88	1.20	0.25
RT5-S/F	3/16-18 X 5/16 DP	5/16 Dowel X 5/16	4.25	1.56	0.31
RT6-S/F	3/8-16 X 5/8 DP	3/8 Dowel X 5/8 DP	5.50	2.19	0.31
RT8-S/F	1/2-13 X 3/4 DP	1/2 Dowel X 3/4 DP	7.25	2.41	0.39

Specifications – RITE-TORQ® S/F Clutch

Model	Internal Inertia (lb-in)	Adjustable Torque Setting Ranges (in-lb)	Index Drive
RT3-S/F	8	100-175, 175-275, 250-350, 325-500	P325
RT5-S/F	43	500-850, 800-1700, 1600-3000	P400
RT6-S/F	125	1000-2700, 2500-5000, 4000-8500	P500
RT8-S/F	460	4000-9500, 6000-15,500	

Input Flange Mounting Specifications

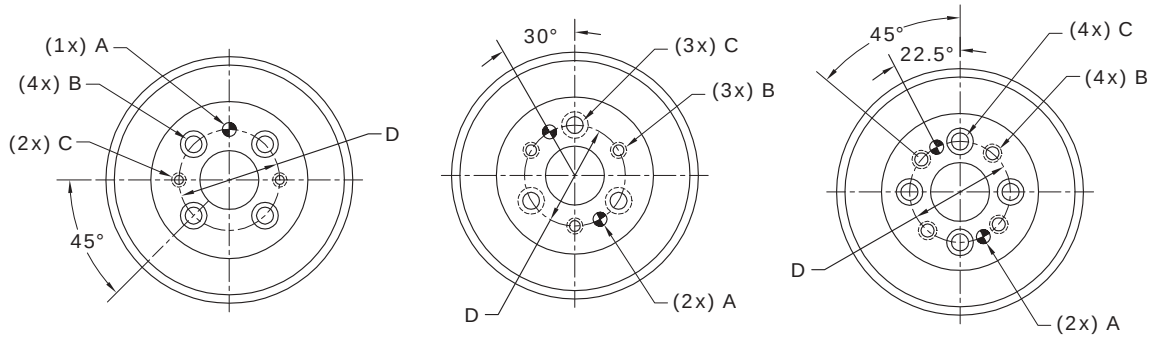

RT3 RT5 RT6 & RT8

Model	A	B	C	D
RT3	.2362/.2358 dia. x 50 dp	Drilled & Counter Bored for 1/4 Socket Head Cap Screw	1/4-20 x .50 dp	1.378
RT5	.3750/.3745 dia. x .75 dp	3/8-16 x .75 dp	Drilled & Counter Bored for 3/8 Socket Head Cap Screw	2.250
RT6	.3750/.3745 dia. x .75 dp	3/8-16 x .75 dp	Drilled & Counter Bored for 3/8 Socket Head Cap Screw	3.250
RT8	.5000/.4995 dia. x 1.00 dp	1/2-13 x 1.00 dp	Drilled & Counter Bored for 1/2 Socket Head Cap Screw	4.250

Input Overload Clutches (IOC)

IMC's Input Overload Clutches (IOC) are used when an output overload clutch cannot be mounted to your index drive. The trip torque setting of the Input Overload Clutches is set under fully loaded, field conditions. When an overload condition is removed, the clutch automatically takes hold and carries peak load as usual. Resetting is required only when the load changes. Since the clutch mounts to the gear reducer, the IOC is selected based on the size of the gear reducer used in the application. Your IMC sales representative will help determine the proper clutch and clutch bore size.

IOC Model	Reducer
180-IOC	R180
225-IOC	R225
260-IOC	R260
300-IOC	7300C
350-IOC	7350C
400-IOC	7400C
500-IOC	7500C
600-IOC	7600C
700-IOC	7700C
800-IOC	7800C

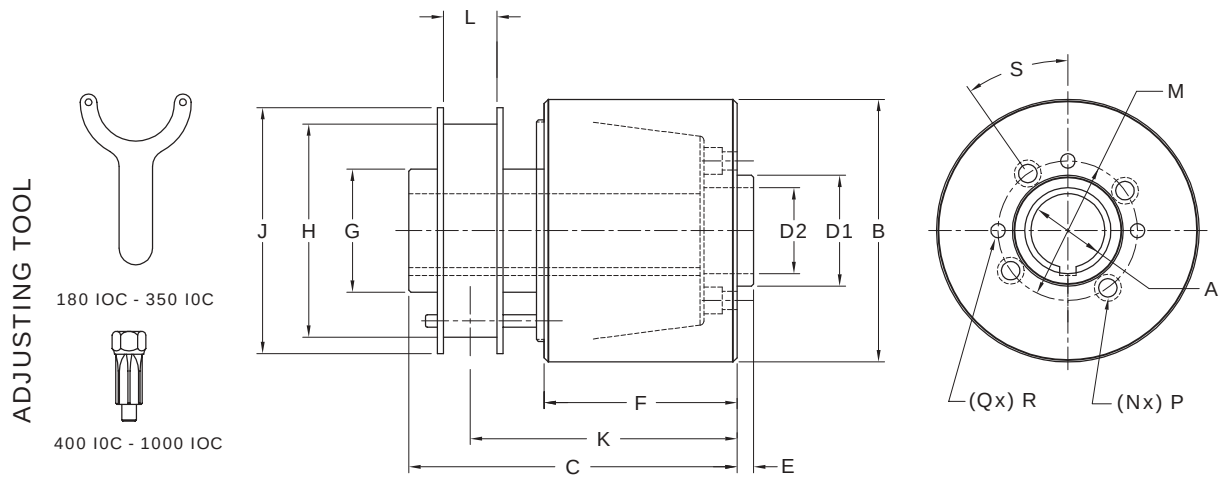

MODEL	A (BORE RANGE)	B	C	D1	D2	E	F	G	H	J	K	L	M	N	P	Q	R	S
180-IOC	.625-.748	3.50	4.35	--------	0.750	--------	2.43	1.75	3.00	3.50	3.35	0.81	1.062	4	0.219	3	0.156	45°
200-IOC	.625-.875	3.50	4.35	1.000	--------	0.25	2.43	1.75	3.00	3.50	3.35	0.81	1.437	4	0.281	3	0.219	35°
225-IOC	0.938	4.00	5.00	1.188	--------	0.25	2.94	1.88	3.25	3.75	4.06	0.81	1.562	6	0.281	4	0.219	30°
250-IOC	1.125-1.250	4.00	5.00	1.688	--------	0.25	2.94	1.88	3.25	3.75	4.06	0.81	2.125	4	0.281	3	0.219	35°
260-IOC	.938-1.188	4.00	5.00	--------	1.188	--------	2.94	1.88	3.25	3.75	4.06	0.81	2.000	4	0.343	3	0.281	45°
300-IOC	1.250-1.938	6.00	6.81	2.188	--------	0.25	4.19	2.94	4.50	5.00	5.65	0.81	2.687	6	0.344	3	0.281	0°
350-IOC	1.438-1.938	6.00	6.81	2.438	--------	0.25	4.19	2.94	4.50	5.00	5.65	0.81	3.000	6	0.344	3	0.281	0°
400-IOC	1.938	8.00	7.88	2.438	--------	0.25	5.53	3.63	5.25	5.75	6.75	0.81	3.250	6	0.531	2	0.169	0°
500-IOC	1.938-2.938	10.00	9.38	3.188	--------	0.25	6.44	5.12	7.00	7.50	8.03	0.81	4.000	6	0.531	3	0.469	0°
600-IOC	2.938-3.5	10.00	9.38	3.938	--------	0.25	6.44	5.12	7.00	7.50	8.03	0.81	4.688	6	0.531	3	0.469	0°
700-IOC	3.500	12.12	12.25	3.938	--------	0.25	8.5	6.25	8.75	9.25	10.50	0.81	5.500	6	0.656	3	0.594	0°
800-IOC	3.500	16.37	13.75	4.438	--------	0.25	9.95	7.50	9.75	10.25	11.95	0.81	5.750	6	0.781	4	0.719	0°

Parts Handlers

IMC
INDUSTRIAL MOTION CONTROL, LLC.
CAMCO FERGUSON

Features

IMC Parts Handlers are available in **Rotary, Linear and Walking Beam** configurations to meet your parts handling needs. They can be combined with IMC Index Drives and Precision Link Conveyors for a complete automated system.

- **RPP Cambot® Rotary Parts Handlers** (Page I-2) are designed for high precision and high capacity.
- **HD-LPP Heavy Duty Linear Parts Handlers** (Page I-15) offer smooth, controlled motions and high load capacities.
- **MR-LPP Mid-Range Linear Parts Handlers** (Page I-27) have side input shafts ideal for line shaft driven applications.
- **WBD Walking Beam Drives** (Page I-39) are an economic alternative to a short precision link conveyor.

Cambot® RPP Rotary Parts Handlers

The IMC **RPP Cambot® Rotary Parts Handler** is designed for high precision and high capacity. This proven design can be used in a wide variety of industries including automotive, packaging and electronics among others. The RPP can be combined with other IMC products such as index drives and precision conveyors for a complete, automated system. The RPP is ideal for pick and place applications with features including:

- Rugged and precise cam operated mechanisms engineered for a minimum of 8000 hours of maintenance-free life.
- Hardened and ground cams drive both the lift and rotary axes.
- Preloaded precision cam followers eliminate backlash and ensure smooth movement.
- Preloaded taper roller bearings on the camshaft (Input Shaft).
- Four-point contact preloaded roller bearing on the rotary axis.
- All bearings are lubricated by an oil bath.
- One-piece lift arm.
- Ball bushings (recirculating-ball type) support the main lift shaft and turn the large output surface and ride on hardened shafts for stability and stiffness.
- Manufactured in a fully integrated application, design, manufacturing and inspection environment.

The RPP Cambot® can be made with custom motion sequences to synchronize with specific application requirements. An IMC Engineer can quickly evaluate possible sequences using IMC's sizing software.

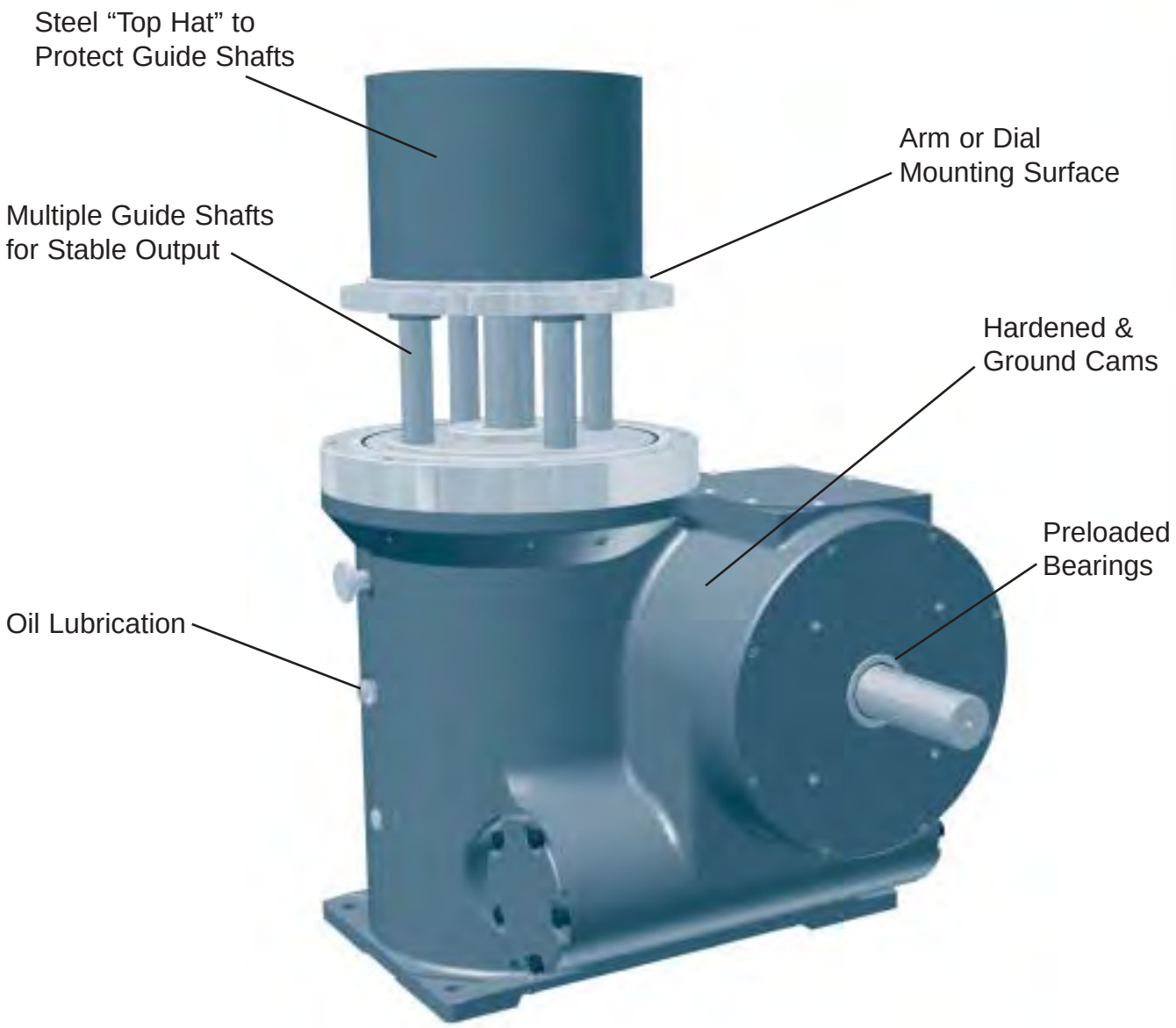
Steel “Top Hat” to
Protect Guide Shafts
Arm or Dial
Mounting Surface
Multiple Guide Shafts
for Stable Output
Hardened &
Ground Cams
Preloaded
Bearings
Oil Lubrication

150RPP

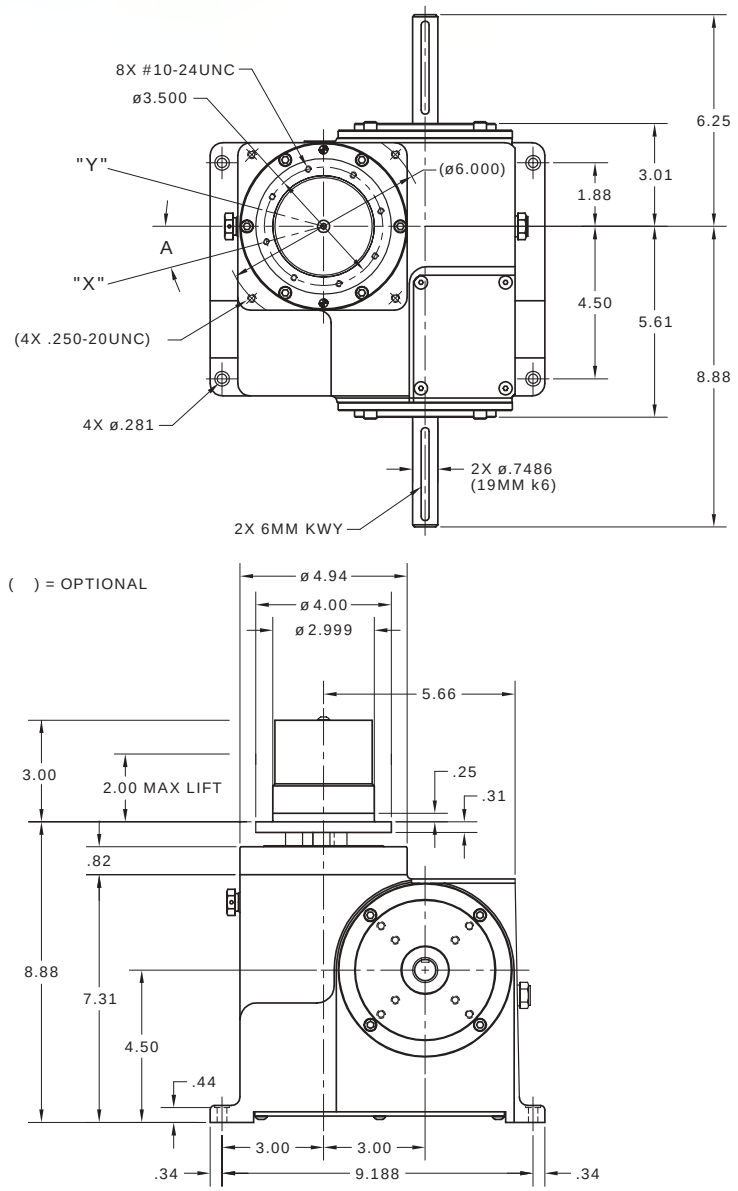

All dimensions are subject to change. For actual dimensions, please request the current drawing from IMC.

Oscillating Motion

Rotation	Angle A	Lift (in.)	Model
120°	0°	1.00	150RPP120H20-1H20
90°	15°	1.00	150RPP90H20-1H20
	15°	2.00	150RPP90H20-2H20
60°	0°	1.00	150RPP60H20-1H20
	0°	2.00	150RPP60H20-2H20
45°	22.5°	1.00	150RPP45H20-1H20
	22.5°	2.00	150RPP45H20-2H20

Indexing Motion

Rotation	Angle A	Lift (in.)	Model
180°	0°	1.00	150RPP2H20-1H20
	0°	2.00	150RPP2H20-2H20
120°	0°	1.00	150RPP3H20-1H20
	0°	2.00	150RPP3H20-2H20
90°	0°	1.00	150RPP4H20-1H20
	0°	2.00	150RPP4H20-2H20
60°	0°	1.00	150RPP6H20-1H20
	0°	2.00	150RPP6H20-2H20

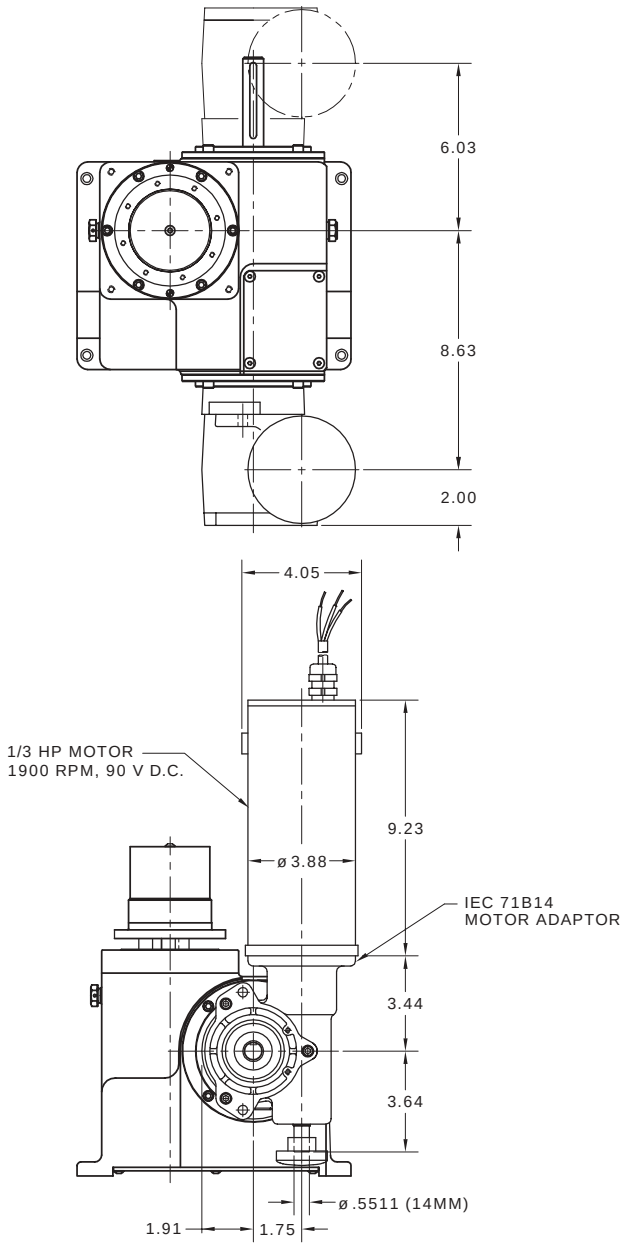

All dimensions are subject to change. For actual dimensions, please request the current drawing from IMC.

Standard Package

150RPP with

- Standard Indexing or Oscillating Motion
- R180 Reducer (Ratios from 5:1 to 60:1)
  - — Double Extended Worm Shaft (Input)
  - — Worm Shaft Handwheel
- 1/3 hp DC Motor
- Varipak DC Motor Control (up to 30 cpm)

Optional Accessories

- 1/3 hp AC Drive Package with Inverter Duty Motor and Inverter Drive (up to 60 cpm)
- Electric Clutch-Brake
- 180-IOC Input Overload Clutch
- Digi-Dog Digital Programmable Limit Switch
- Camtronics Rotary Limit Switch

Capacity*

Maximum Mass: 50 lbs.

Maximum Inertia: 340 lb-in^2

* Note: These values are for speeds of less than 30 rpm, the minimum cam time for rise and rotation, and are for reference only. Each application must be reviewed and approved by IMC Engineering.

300RPP

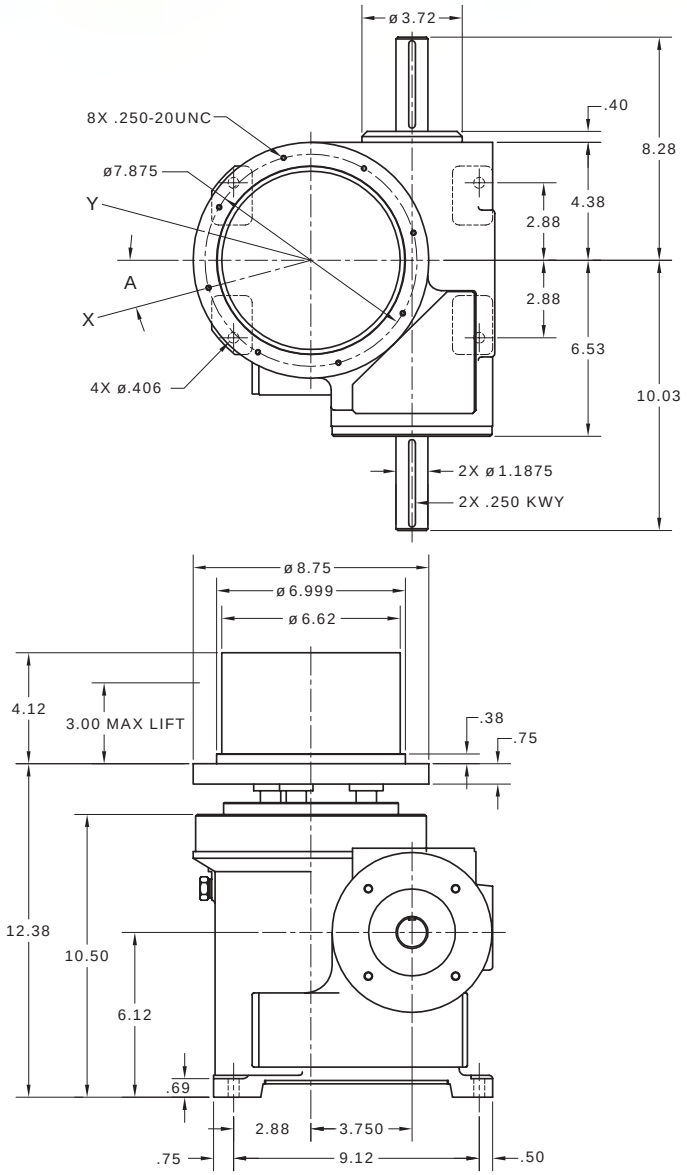

All dimensions are subject to change. For actual dimensions, please request the current drawing from IMC.

Oscillating Motion

Rotation	Angle A	Lift (in.)	Model
120°	0°	1.00	300RPP120H24-1H24
		2.00	300RPP120H24-2H24
90°	15°	1.00	300RPP90H24-1H24
		2.00	300RPP90H24-2H24
		3.00	300RPP90H24-3H24
60°	0°	1.00	300RPP60H24-1H24
		2.00	300RPP60H24-2H24
		3.00	300RPP60H24-3H24
45°	22.5°	1.00	300RPP45H24-1H24
		2.00	300RPP45H24-2H24
		3.00	300RPP45H24-3H24

Indexing Motion

Rotation	Angle A	Lift (in.)	Model
180°	0°	1.00	300RPP2H24-1H24
		2.00	300RPP2H24-2H24
		3.00	300RPP2H24-3H24
120°	0°	1.00	300RPP3H24-1H24
		2.00	300RPP3H24-2H24
		3.00	300RPP3H24-3H24
90°	0°	1.00	300RPP4H24-1H24
		2.00	300RPP4H24-2H24
		3.00	300RPP4H24-3H24
60°	0°	1.00	300RPP6H24-1H24
		2.00	300RPP6H24-2H24
		3.00	300RPP6H24-3H24

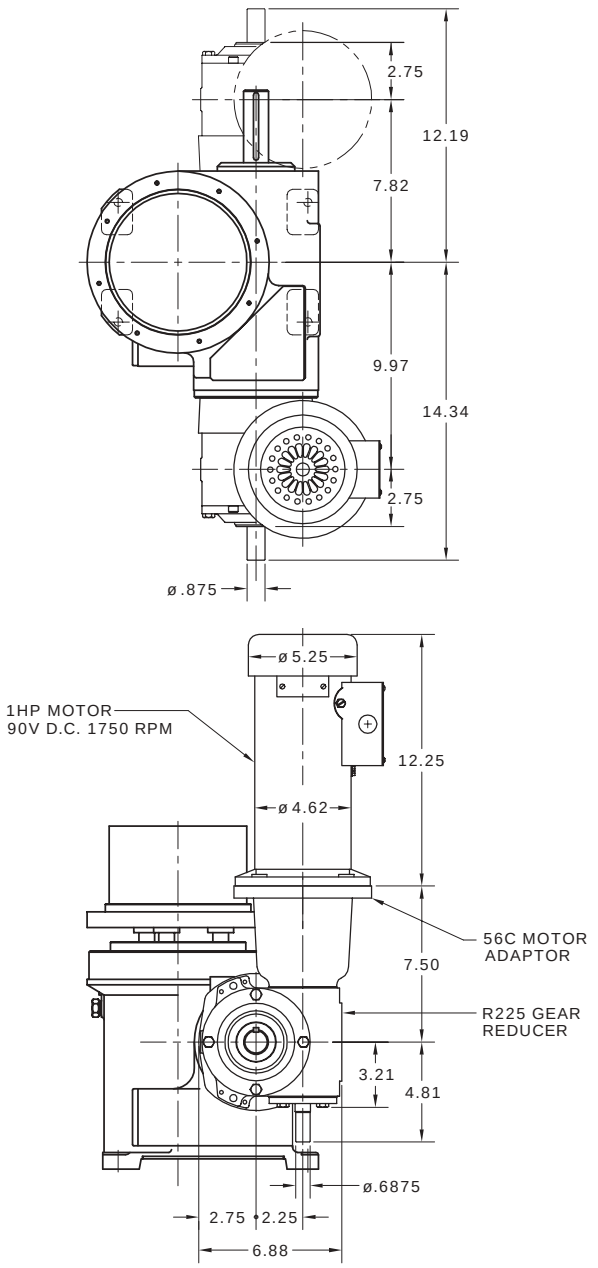

All dimensions are subject to change. For actual dimensions, please request the current drawing from IMC.

Standard Package

300RPP with

- Standard Indexing or Oscillating Motion
- R225 Reducer (Ratios from 5:1 to 60:1)
  — 56C Motor Adapter and Coupling
- 1 hp DC Motor
- Varipak DC Motor Control (up to 30 cpm)

Optional Accessories

- 1 hp AC Drive Package with Inverter Duty Motor and Inverter Drive (up to 60 cpm)
- Electric Clutch-Brake
- 225-IOC Input Overload Clutch
- Digi-Dog Digital Programmable Limit Switch
- Camtronics Rotary Limit Switch

Capacity*

Maximum Mass: 150 lbs.

Maximum Inertia: 1700 lb-in^2

* Note: These values are for speeds of less than 30 rpm, the minimum cam time for rise and rotation, and are for reference only. Each application must be reviewed and approved by IMC Engineering.

I

500RPP

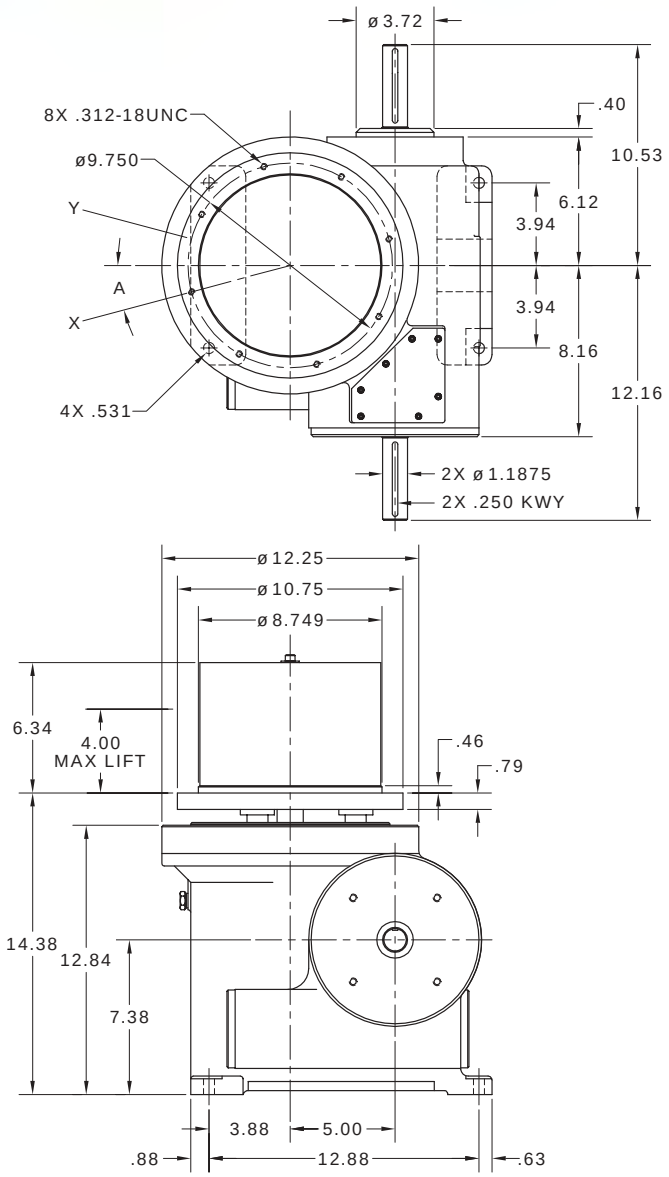

All dimensions are subject to change. For actual dimensions, please request the current drawing from IMC.

Oscillating Motion

Rotation	Angle A	Lift (in.)	Model
120°	0°	2.00	500RPP120H32-2H32
		3.00	500RPP120H32-3H32
90°	15°	2.00	500RPP90H32-2H32
		3.00	500RPP90H32-3H32
		4.00	500RPP90H32-4H32
60°	0°	2.00	500RPP60H32-2H32
		3.00	500RPP60H32-3H32
		4.00	500RPP60H32-4H32
45°	22.5°	2.00	500RPP45H32-2H32
		3.00	500RPP45H32-3H32
		4.00	500RPP45H32-4H32

Indexing Motion

Rotation	Angle A	Lift (in.)	Model
180°	0°	2.00	500RPP2H32-2H32
		3.00	500RPP2H32-3H32
		4.00	500RPP2H32-4H32
120°	0°	2.00	500RPP3H32-2H32
		3.00	500RPP3H32-3H32
		4.00	500RPP3H32-4H32
90°	0°	2.00	500RPP4H32-2H32
		3.00	500RPP4H32-3H32
		4.00	500RPP4H32-4H32
60°	0°	2.00	500RPP6H32-2H32
		3.00	500RPP6H32-3H32
		4.00	500RPP6H32-4H32

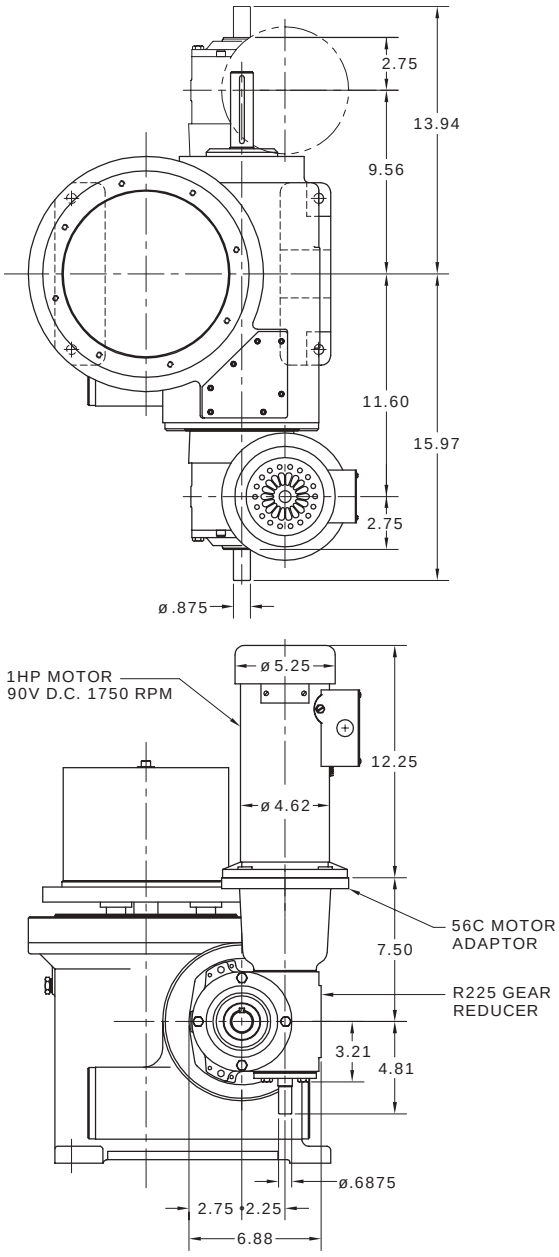

All dimensions are subject to change. For actual dimensions, please request the current drawing from IMC.

Standard Package

500RPP with

- Standard Indexing or Oscillating Motion
- R225 Reducer (Ratios from 5:1 to 60:1)
  — 56C Motor Adapter and Coupling
- 1 hp DC Motor
- Varipak DC Motor Control (up to 30 cpm)

Optional Accessories

- 1 hp AC Drive Package with Inverter Duty Motor and Inverter Drive (up to 60 cpm)
- R260 Reducer (Ratios from 5:1 to 60:1)
- Electric Clutch-Brake
- 225-IOC Input Overload Clutch
- Digi-Dog Digital Programmable Limit Switch
- Camtronics Rotary Limit Switch

Capacity*

Maximum Mass: 180 lbs.

Maximum Inertia: 3415 lb-in^2

* Note: These values are for speeds of less than 30 rpm, the minimum cam time for rise and rotation, and are for reference only. Each application must be reviewed and approved by IMC Engineering.

900RPP

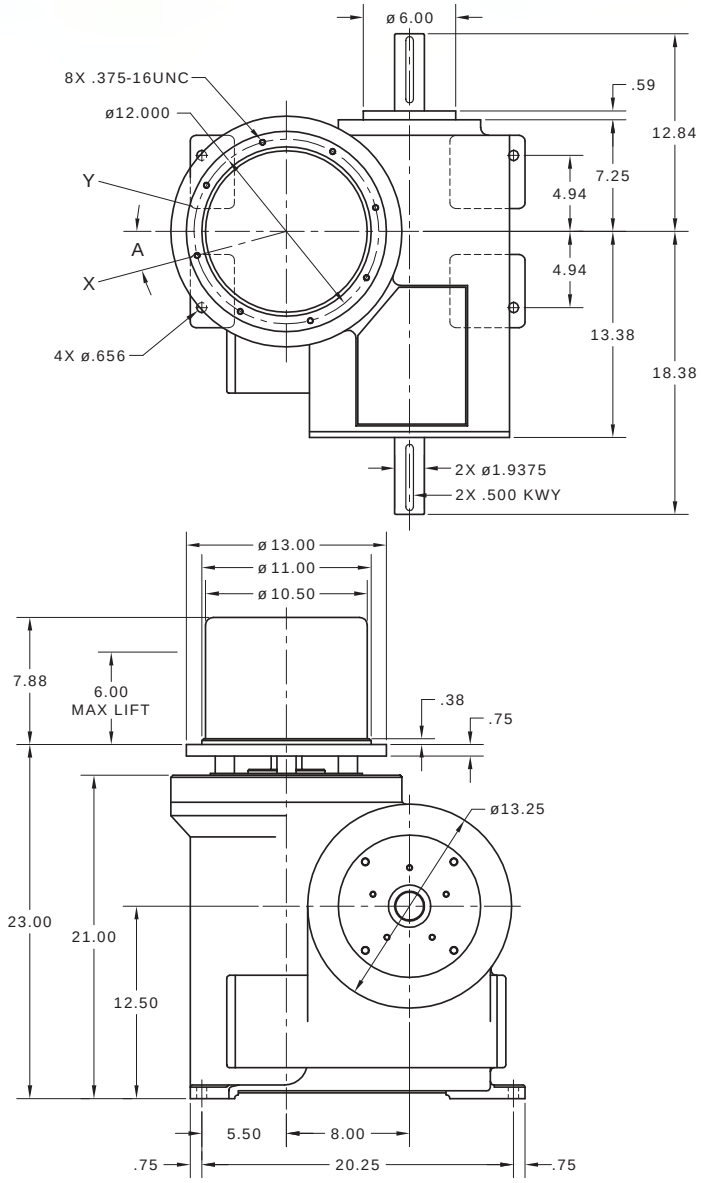

All dimensions are subject to change. For actual dimensions, please request the current drawing from IMC.

Oscillating Motion

Rotation	Angle A	Lift (in.)	Model
120°	0°	2.00	900RPP120H48-2H48
		4.00	900RPP120H48-4H48
90°	15°	2.00	900RPP90H48-2H48
		4.00	900RPP90H48-4H48
		6.00	900RPP90H48-6H48
60°	0°	2.00	900RPP60H48-2H48
		4.00	900RPP60H48-4H48
		6.00	900RPP60H48-6H48
45°	22.5°	2.00	900RPP45H48-2H48
		4.00	900RPP45H48-4H48
		6.00	900RPP45H48-6H48

Indexing Motion

Rotation	Angle A	Lift (in.)	Model
180°	0°	2.00	900RPP2H48-2H48
		4.00	900RPP2H48-4H48
		6.00	900RPP2H48-6H48
120°	0°	2.00	900RPP3H48-2H48
		4.00	900RPP3H48-4H48
		6.00	900RPP3H48-6H48
90°	0°	2.00	900RPP4H48-2H48
		4.00	900RPP4H48-4H48
		6.00	900RPP4H48-6H48
60°	0°	2.00	900RPP6H48-2H48
		4.00	900RPP6H48-4H48
		6.00	900RPP6H48-6H48

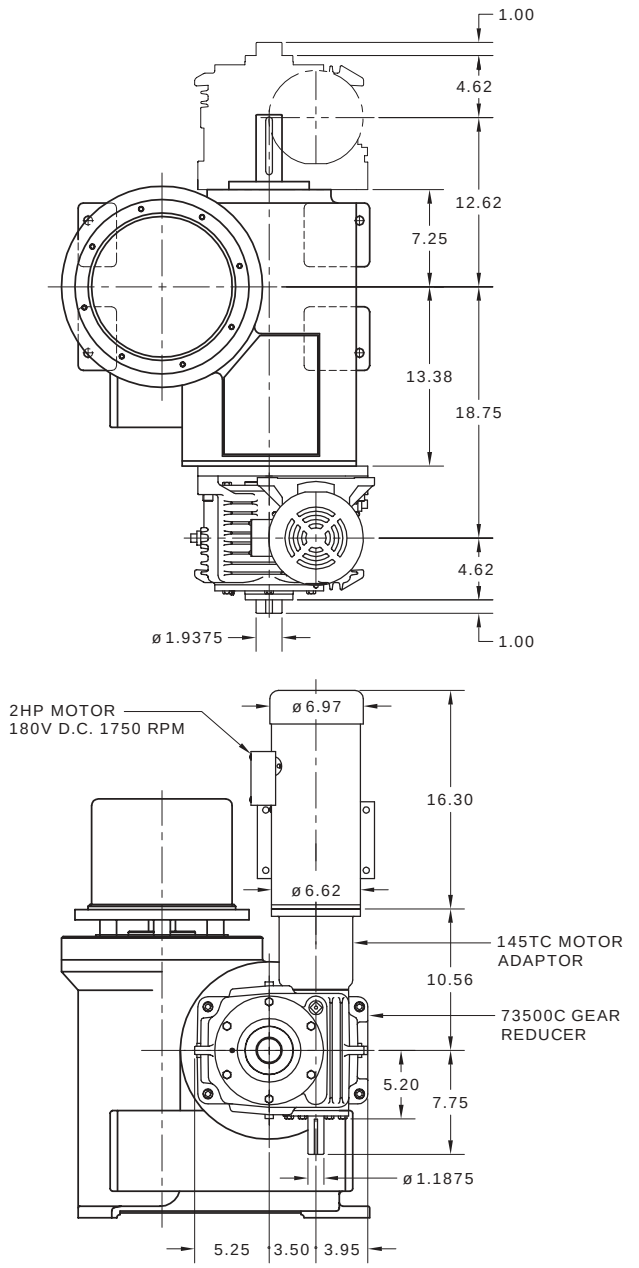

All dimensions are subject to change. For actual dimensions, please request the current drawing from IMC.

Standard Package

900RPP with

- Standard Indexing or Oscillating Motion
- 7350C Reducer (Ratios from 5:1 to 60:1)
  — 143TC Motor Adapter and Coupling
- 2 hp DC Motor
- Varipak DC Motor Control (up to 30 cpm)

Optional Accessories

- 2 hp AC Drive Package with Inverter Duty Motor and Inverter Drive (up to 60 cpm)
- Electric Clutch-Brake
- 350-IOC Input Overload Clutch
- Digi-Dog Digital Programmable Limit Switch
- Camtronics Rotary Limit Switch

Capacity*

Maximum Mass: 500 lbs.

Maximum Inertia: 27,300 lb-in^2

* Note: These values are for speeds of less than 30 rpm, the minimum cam time for rise and rotation, and are for reference only. Each application must be reviewed and approved by IMC Engineering.

I

Timing Diagram – Oscillator

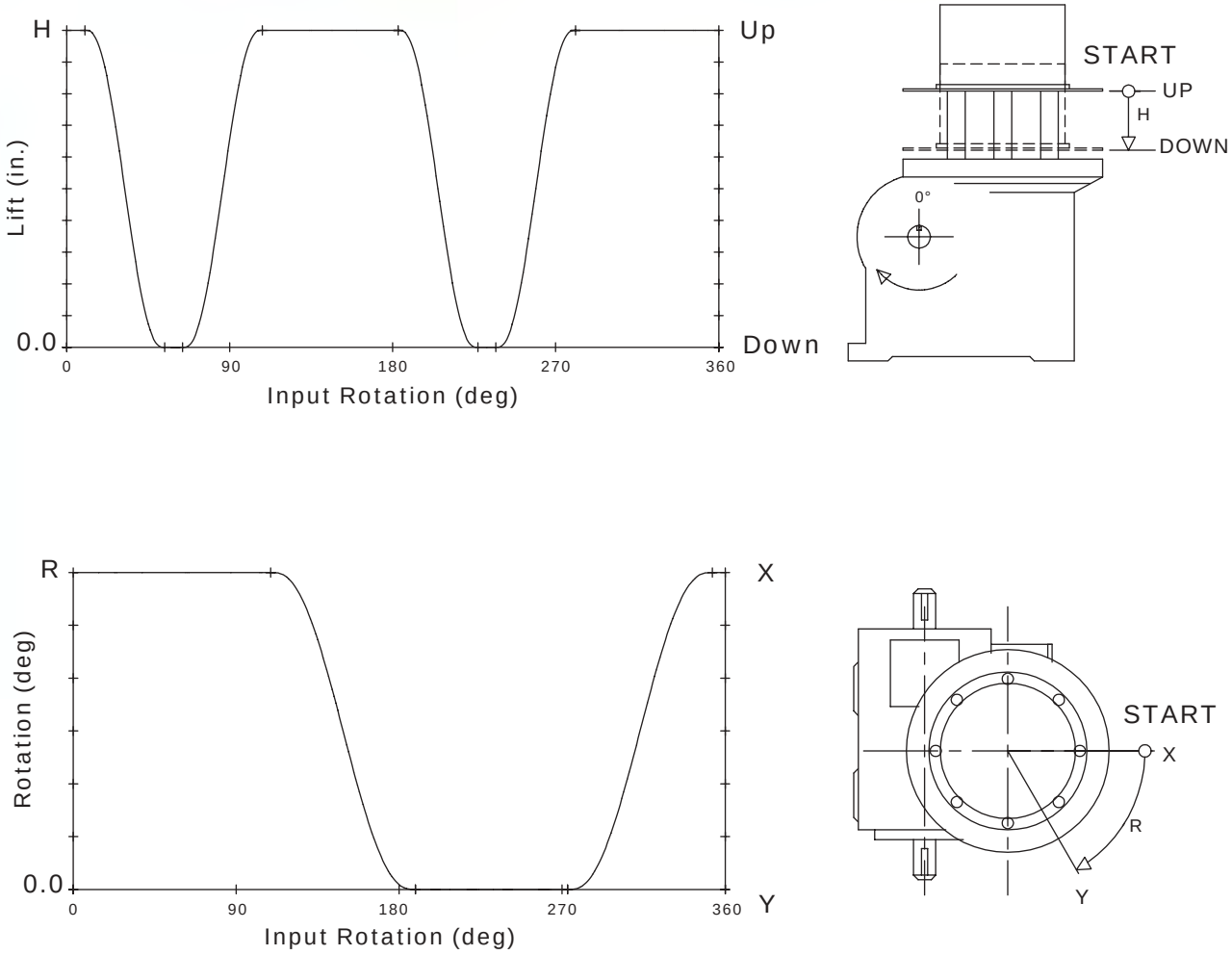

Motion Options

- Standard starting position (home) at time 0 is at maximum rise (up) and at the X rotary position.
- The standard sequence can be mirrored in either the lift, rotary or both:
  - — The mirrored lift starts in the zero elevation or down position
  - — The mirrored rotary motion starts at Y.
- Custom motion times are also available – consult your Sales Agent for more information.

Timing Diagram – Indexer

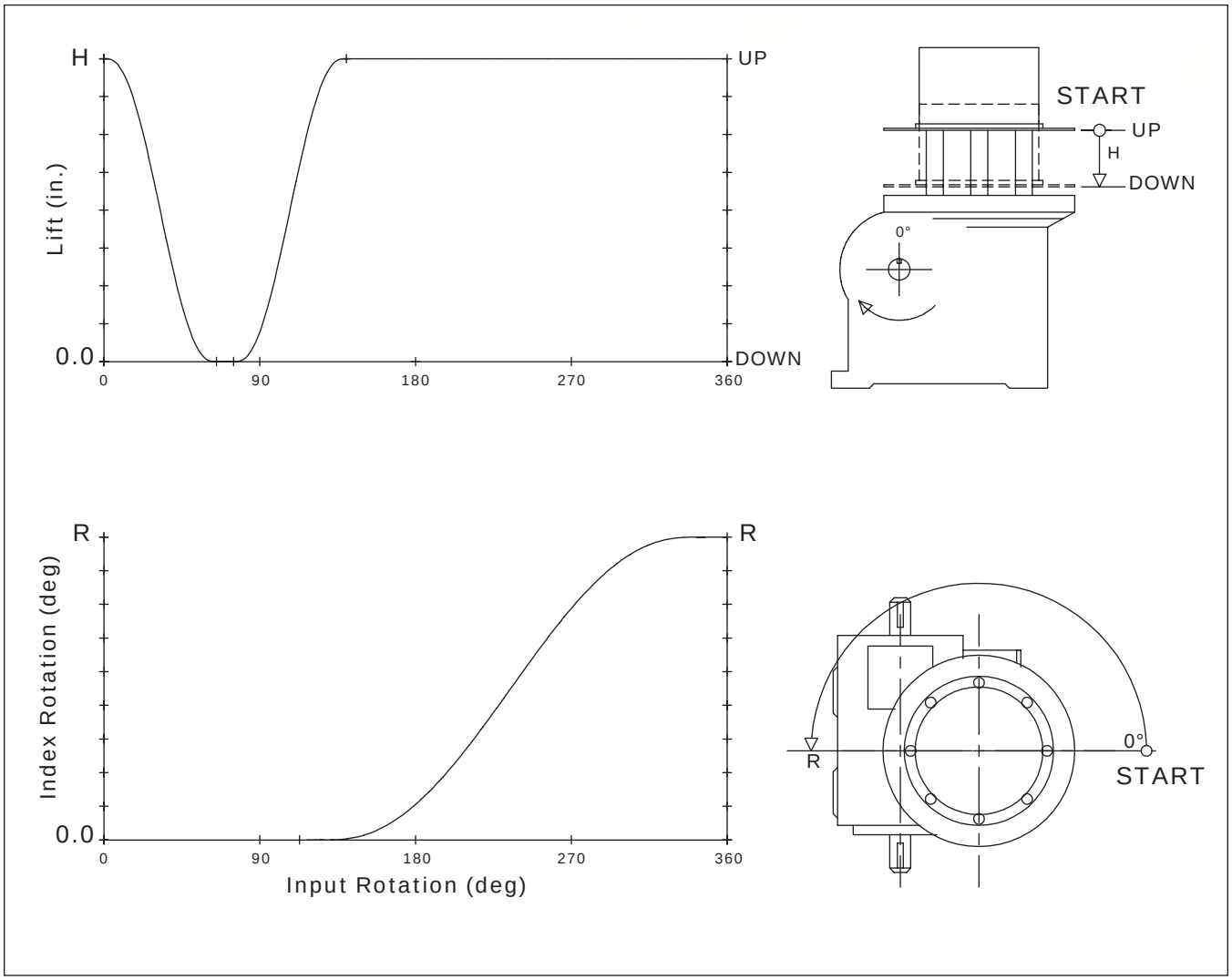

Motion Options

- Standard starting position (home) at time 0 is at maximum rise (up) and at the start of a counter-clockwise index (right-hand cam helix).
- The standard sequence can be mirrored in either the lift, rotary or both:
  - — The mirrored lift starts in the zero elevation or down position
  - — The mirrored rotary motion is a clockwise index (left-hand helix)
- Custom motion times are also available – consult your Sales Agent for more information.

RPP Ordering Procedure

1. Model
2. Rotary Motion (degrees)
   - Oscillator or indexer
   - Oscillator: Home at X or Y
   - Indexer: CW or CCW index
3. Lift (inches)
4. Input Shaft: Side 1, Side 2 or Double Input (DI)
5. Mounting Position: 1-6

Position of Shafts

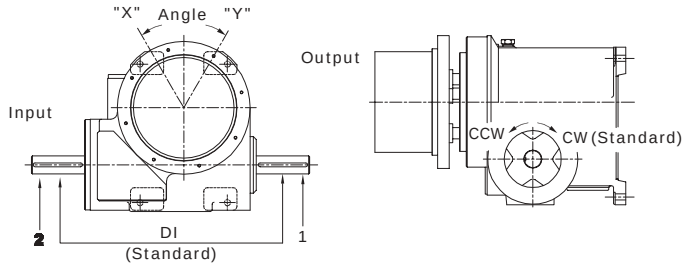

Standard Output Sequence

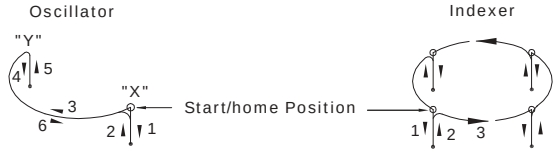

Indexer Mounting Position

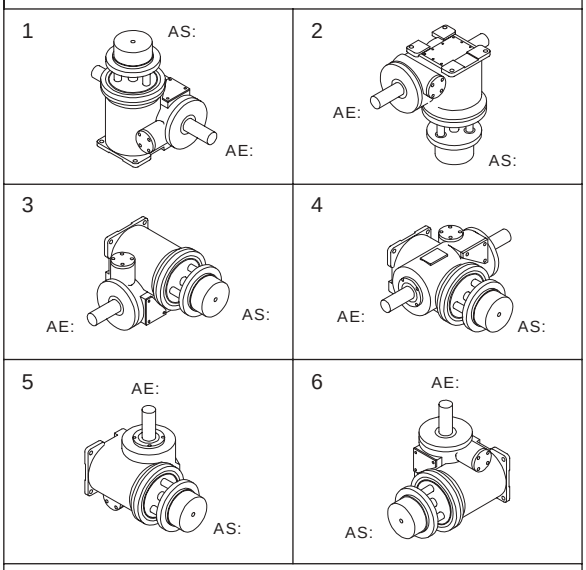

AE: Input Shaft AS: Output Shaft

Reducer Ordering Procedure

1. Reducer Model, Ratio and Mounting Position
2. Motor Adaptor Model
3. Motor size

Reducer Mounting Position

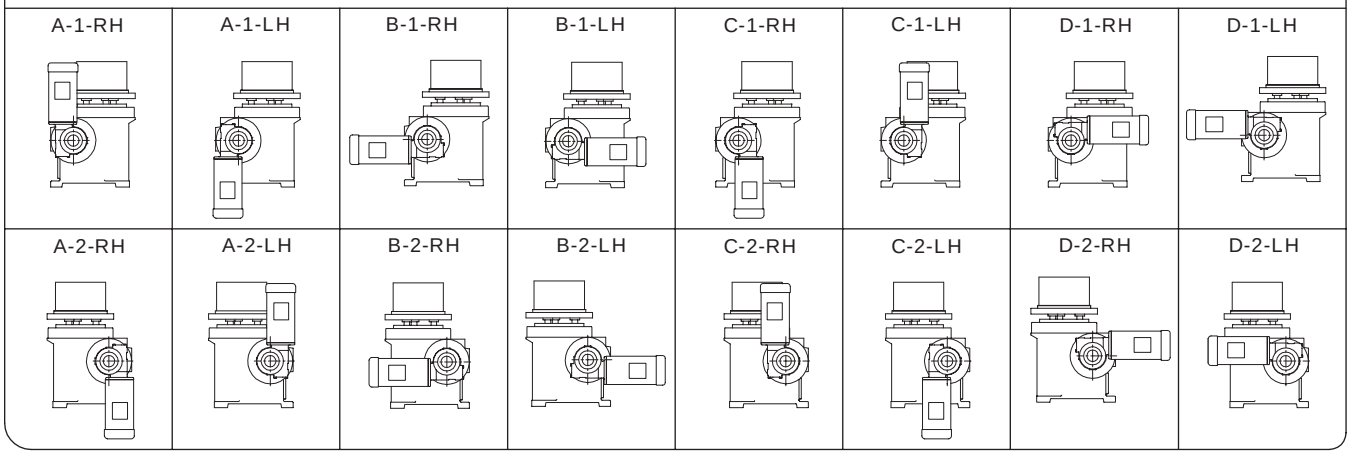

HD-LPP Heavy-Duty Linear Parts Handlers

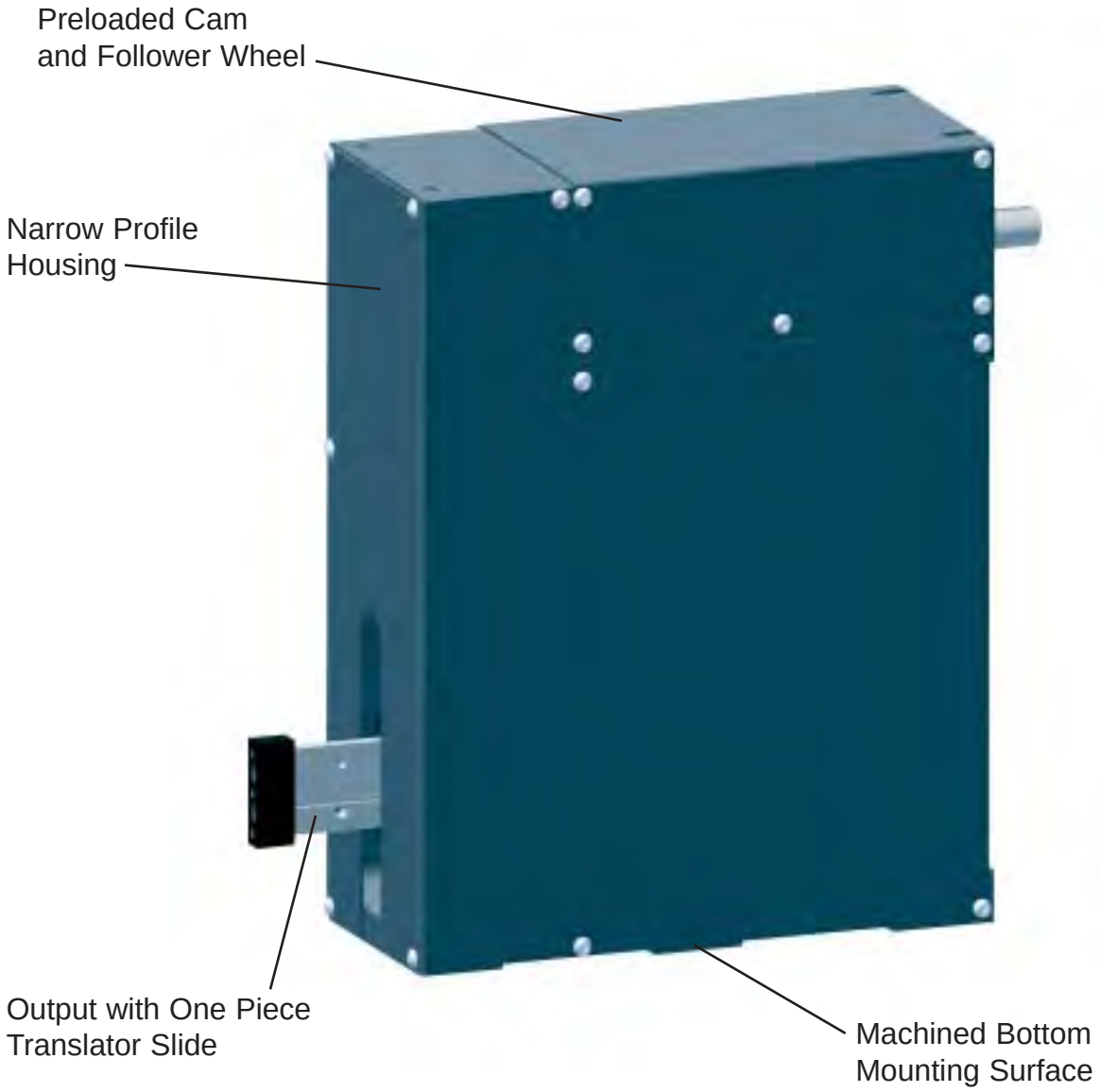

IMC **HD-LPP Heavy-Duty Linear Parts Handlers** offer smooth, controlled motions and high load capacities. The LPP can be combined with other IMC products such as index drives and precision conveyors for a complete automated system. The HD-LPP is ideal for linear pick and place applications with features including:

- High-speed capabilities – up to 60 cycles per minute
- Hardened and ground roller gear cams driving both axes.
- Fully preloaded roller gear cam and follower wheel design eliminates backlash and ensures smooth movement.
- Camshaft bearings are preloaded taper roller bearings.
- Compact design – small footprint
- Long-life grease lubrication

The roller gear cam and follower wheel provide for the greatest variety of motion sequences making the HD-LPP ideal for custom motion applications.

140LPP

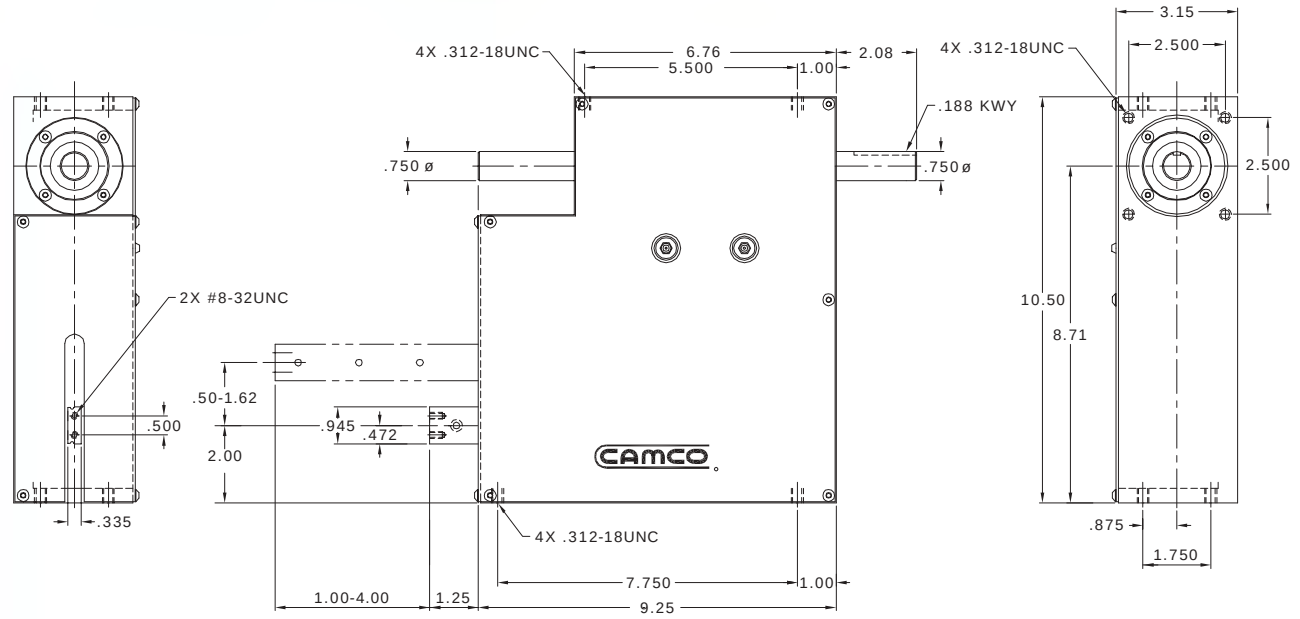

All dimensions are subject to change. For actual dimensions, please request the current drawing from IMC.

Standard Motions

- .50" Lift x 1.00" Transfer
- 1.00" Lift x 2.00" Transfer
- 1.50" Lift x 3.00" Transfer
- 1.62" Lift x 4.00" Transfer

Technical Specifications

Lift Accuracy	±.010"
Lift Repeatability	±.002"
Transfer Accuracy	±.005"
Transfer Repeatability	±.002"

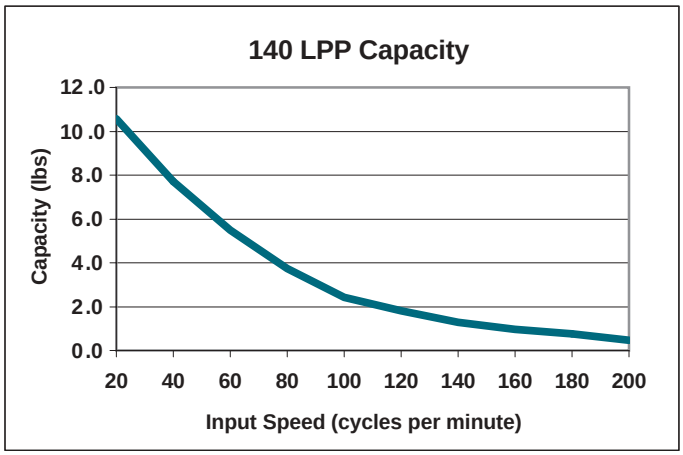

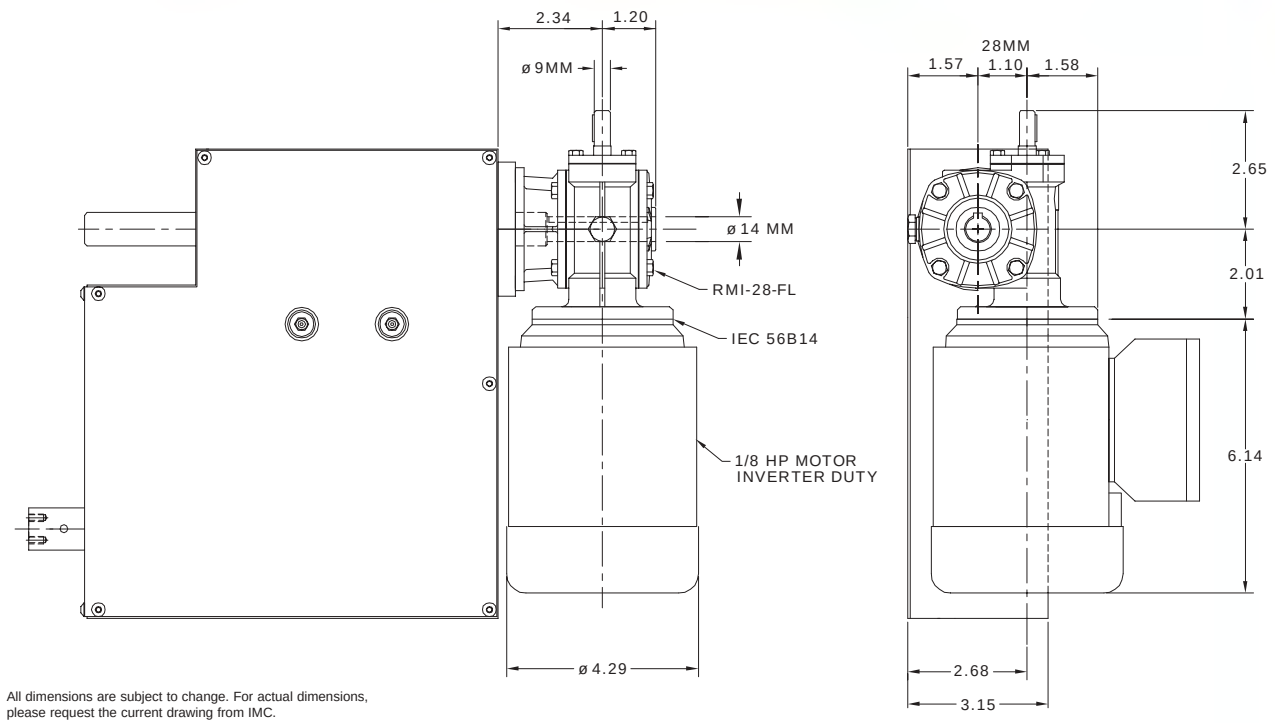

All dimensions are subject to change. For actual dimensions, please request the current drawing from IMC.

Standard Package

- RMI-28-FL reducer (Ratios from 1/7 to 1/100)
  — IEC 56B14 adapter
- 1/8 hp Inverter Duty Motor

Optional Accessories

- Reducer with double extended input
- AC Inverter Duty Motor with AC Control
- Belt-Driven DC Gearmotor

240LPP

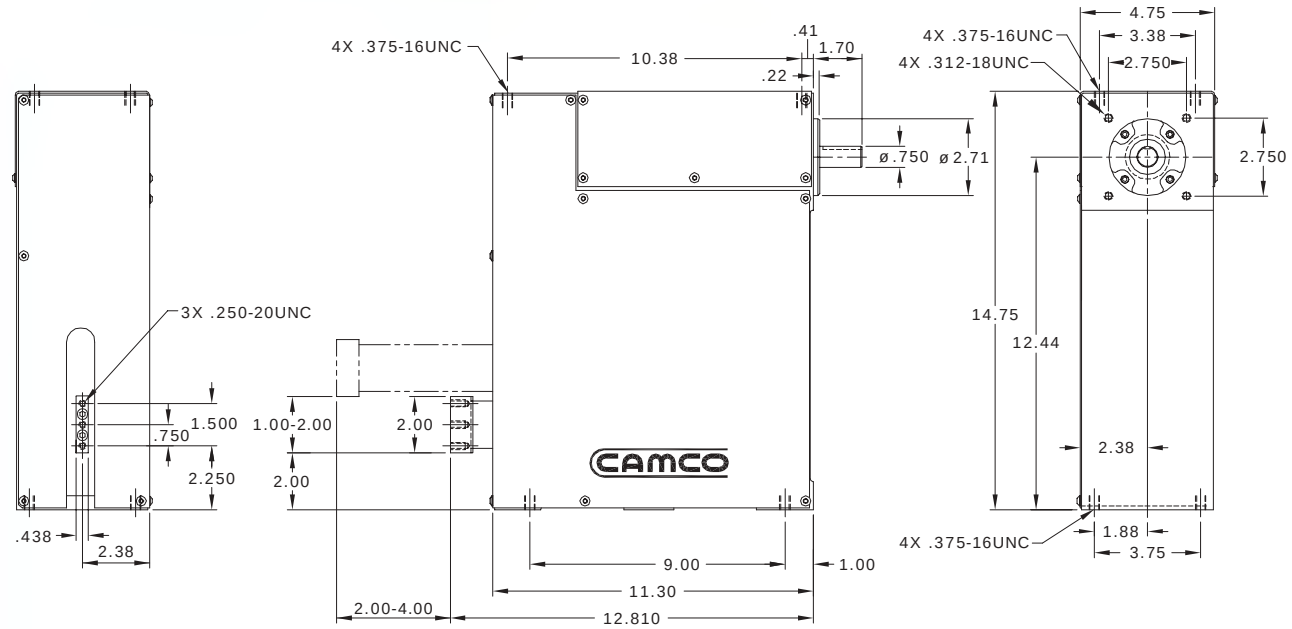

All dimensions are subject to change. For actual dimensions, please request the current drawing from IMC.

Standard Motions

Any combination of Lift and Transfer distances

Lift Distance (in.)	1.00, 1.50 or 2.00
Transfer Distance (in.)	2.00, 3.00 or 4.00

Technical Specifications

Lift Accuracy	±.010"
Lift Repeatability	±.002"
Transfer Accuracy	±.005"
Transfer Repeatability	±.002"

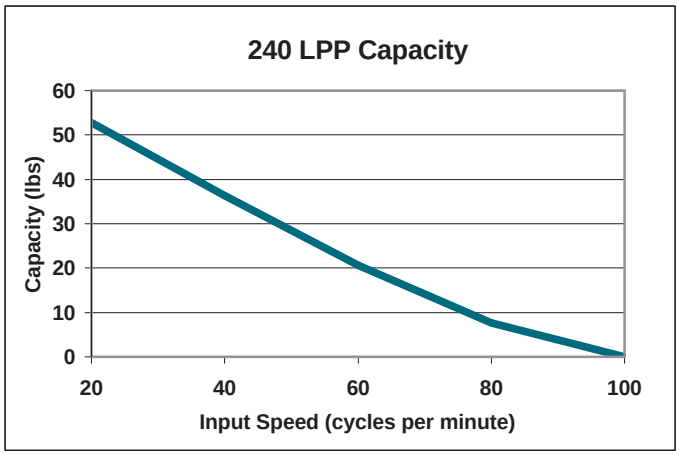

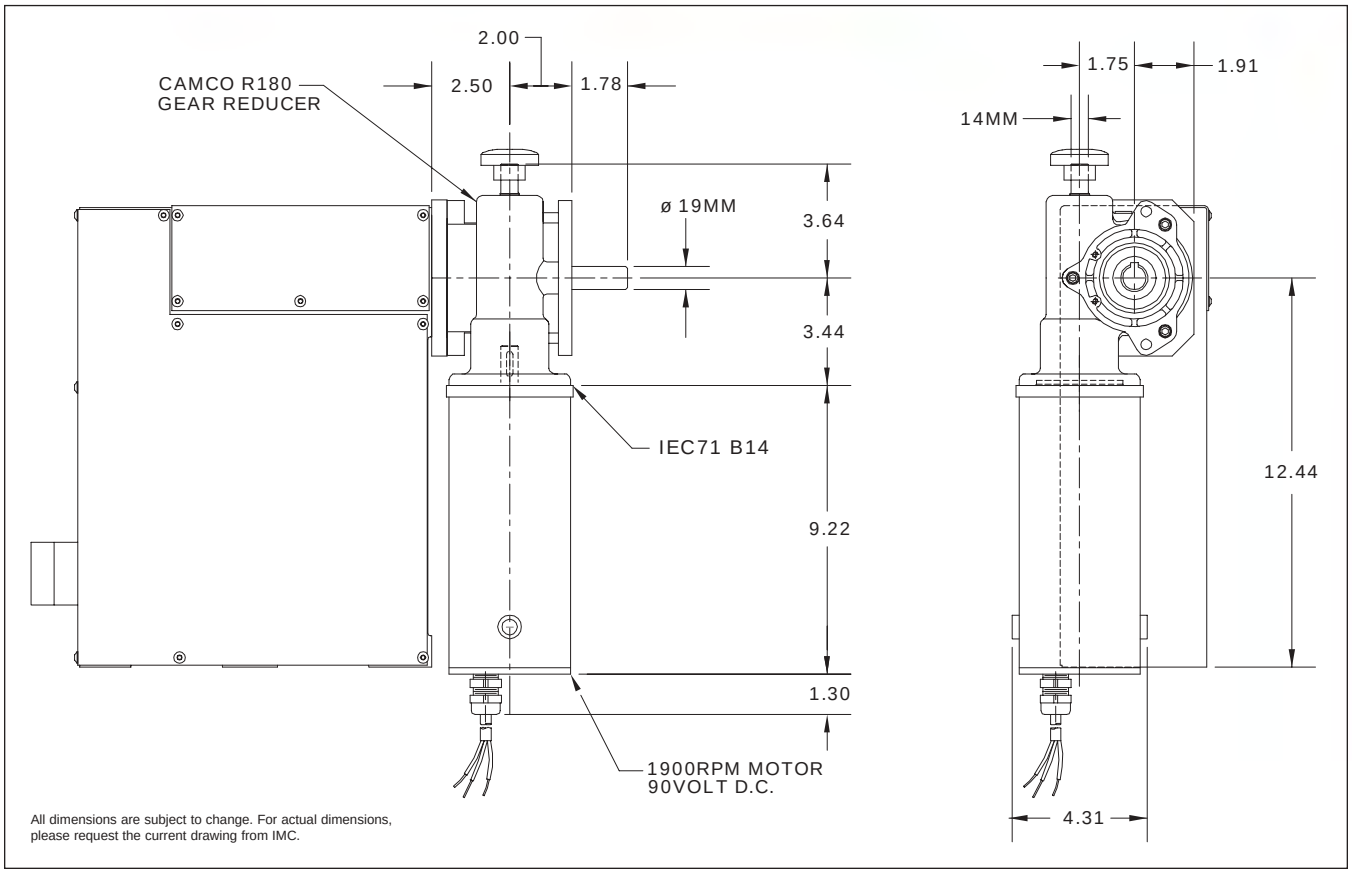

All dimensions are subject to change. For actual dimensions, please request the current drawing from IMC.

Standard Package

240LPP with

- Standard Motion Sequence
- R180 Reducer (Ratios from 5:1 to 60:1)
- 1/3 hp DC Motor
- Varipak DC Motor Control (up to 30 cpm)

Optional Accessories

- LF-RMI-40-F1 Reducer (1/7 to 1/100)
  - — Optional Internal Overload Clutch
  - — 1/4 hp Inverter Duty AC Brake Motor
- 1/3 hp AC Drive Package with Inverter Duty Motor and Inverter Drive (up to 60 cpm)
- 180-IOC Input Overload Clutch
- Digi-Dog Digital Programmable Limit Switch
- Camtronics Rotary Limit Switch

380LPP

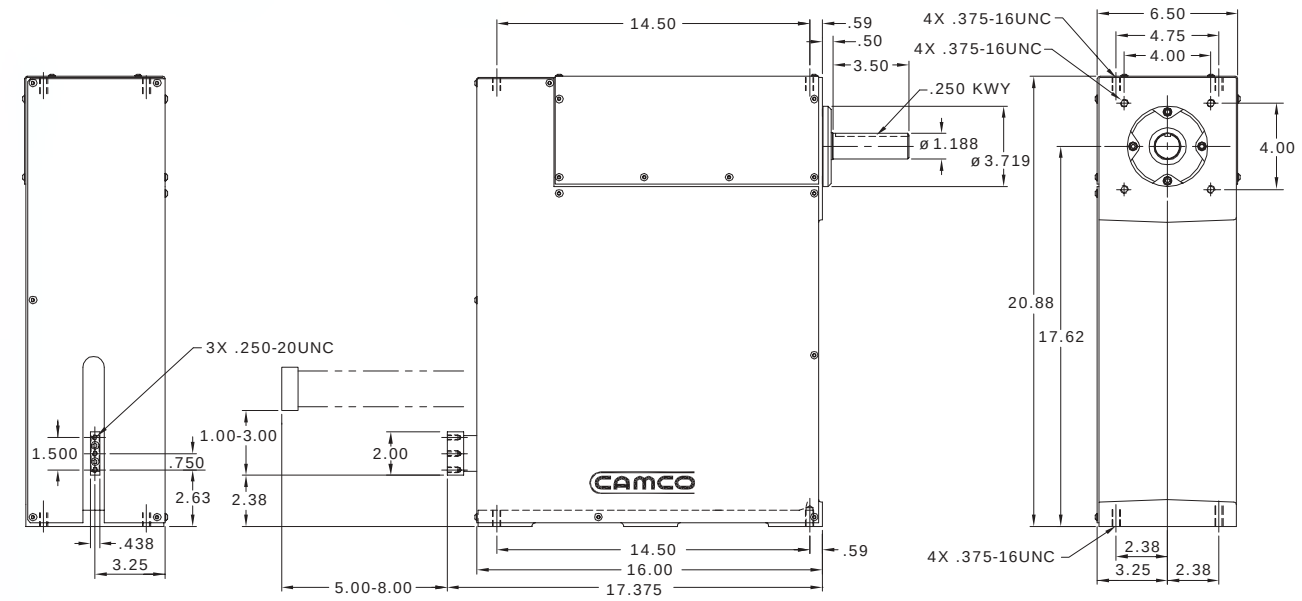

All dimensions are subject to change. For actual dimensions, please request the current drawing from IMC.

Standard Motions

Any combination of Lift and Transfer distances

Lift Distance (in.)	1.00, 2.00 or 3.00
Transfer Distance (in.)	5.00, 6.00, 7.00 or 8.00

Technical Specifications

Lift Accuracy	±.010"
Lift Repeatability	±.002"
Transfer Accuracy	±.005"
Transfer Repeatability	±.002"

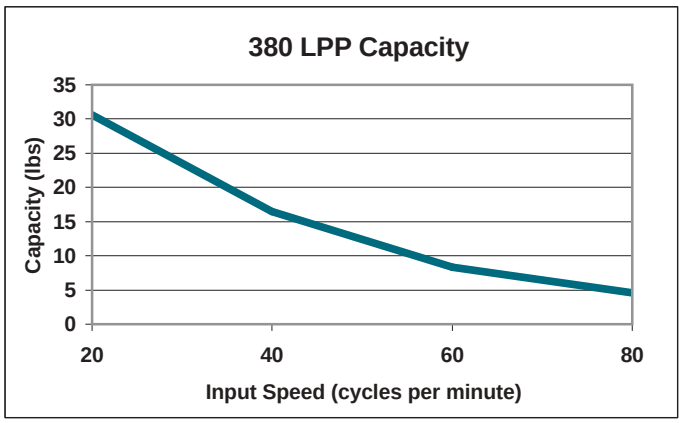

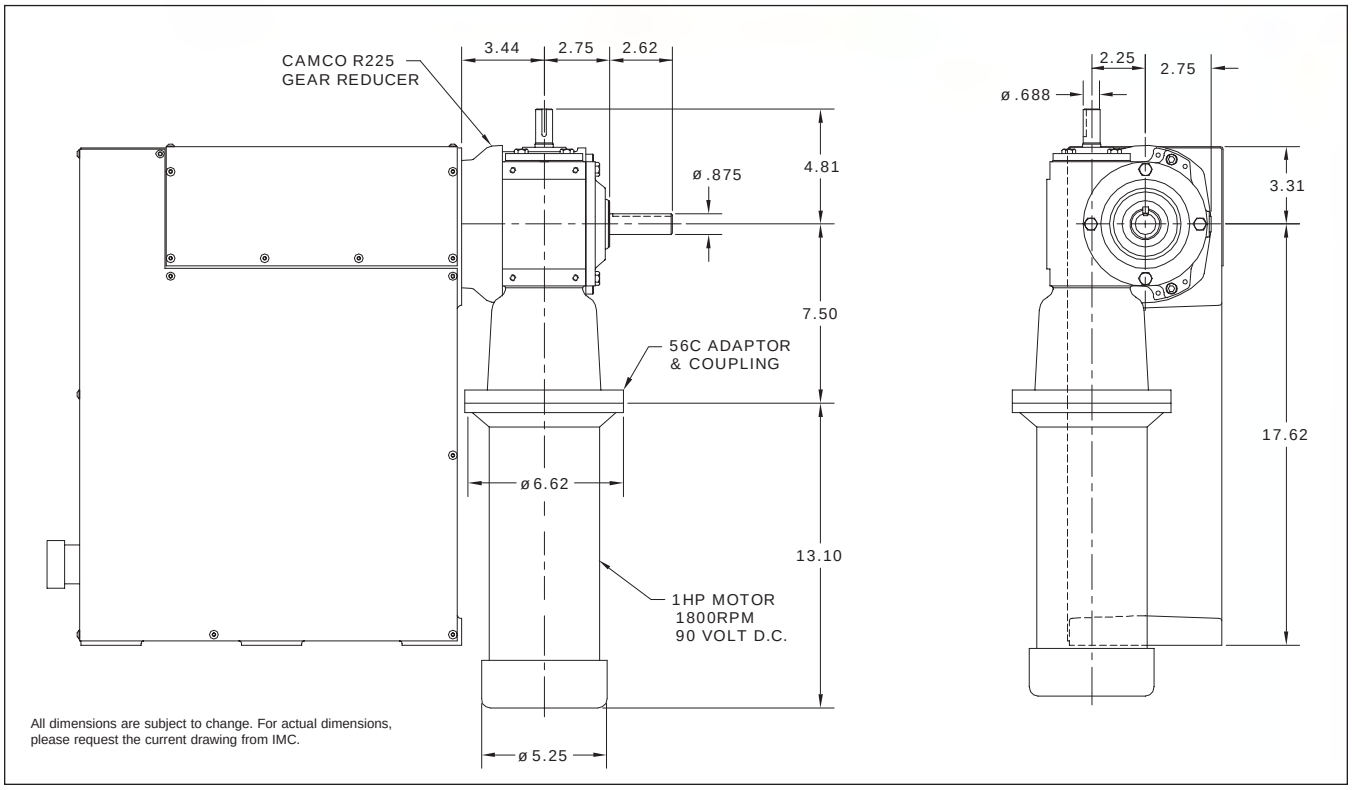

Standard Package

380LPP with

- Standard Motion Sequence
- R225 Reducer (Ratios from 5:1 to 60:1)
  — 56C Motor Adapter and Coupling
- 1 hp DC Motor
- Varipak DC Motor Control (up to 30 cpm)

Optional Accessories

- LF-RMI-50-F2 Reducer (1/7 to 1/100)
  — Optional Internal Overload Clutch
  — 1/2 hp Inverter Duty AC Brake Motor
- 1 hp AC Drive Package with Inverter Duty Motor and Inverter Drive (up to 60 cpm)
- 225-IOC Input Overload Clutch
- Digi-Dog Digital Programmable Limit Switch
- Camtronics Rotary Limit Switch

4120LPP

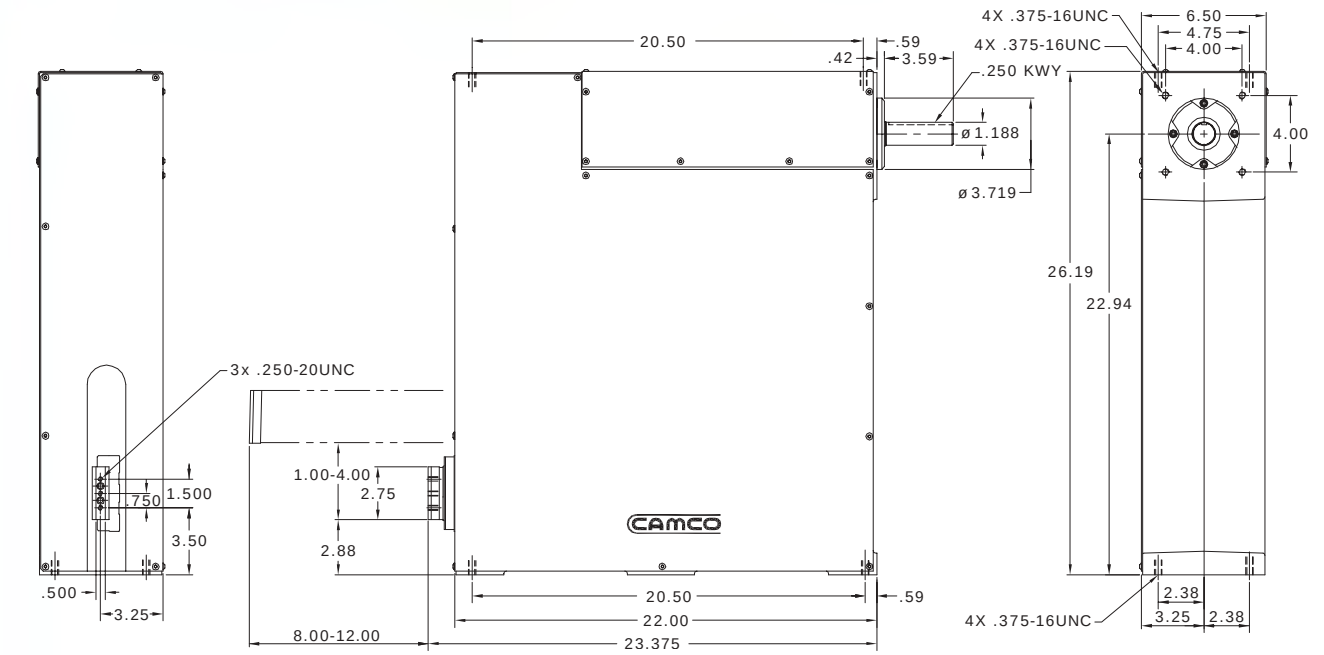

All dimensions are subject to change. For actual dimensions, please request the current drawing from IMC.

Standard Motions

Any combination of Lift and Transfer distances

Lift Distance (in.)	1.00, 2.00, 3.00 or 4.00
Transfer Distance (in.)	8.00, 9.00, 10.00, 11.00 or 12.00

Technical Specifications

Lift Accuracy	±.012"
Lift Repeatability	±.004"
Transfer Accuracy	±.007"
Transfer Repeatability	±.004"

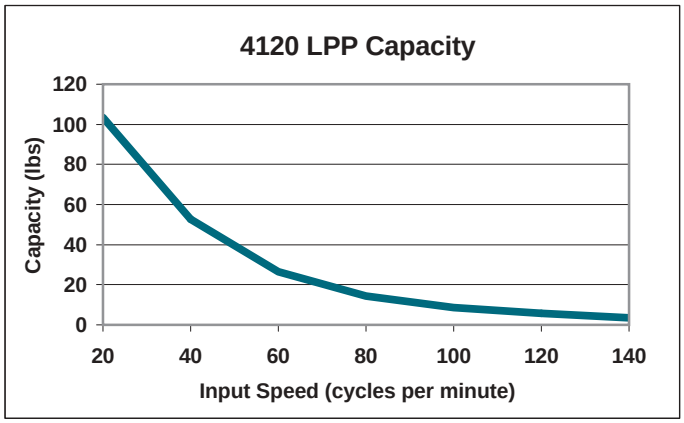

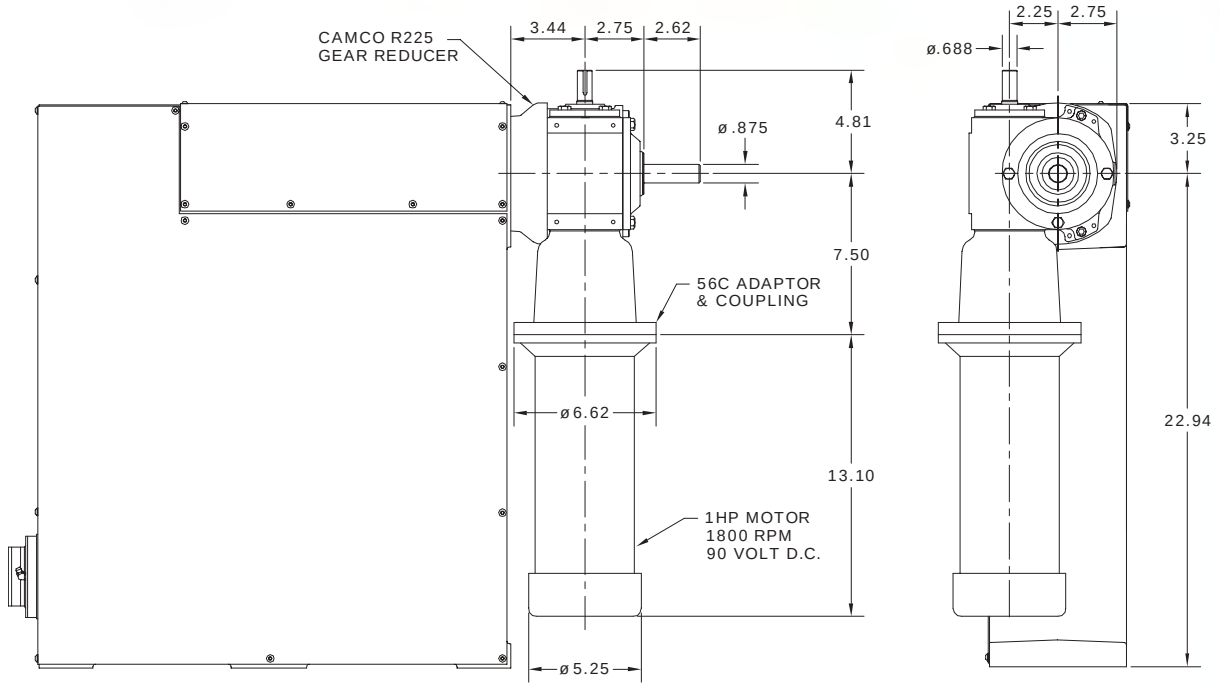

All dimensions are subject to change. For actual dimensions, please request the current drawing from IMC.

Standard Package

4120LPP with

- Standard Motion Sequence
- R225 Reducer (Ratios from 5:1 to 60:1)
  — 56C Motor Adapter and Coupling
- 1 hp DC Motor
- Varipak DC Motor Control (up to 30 cpm)

Optional Accessories

- LF-RMI-70-F3 Reducer (1/7 to 1/100)
  — Optional Internal Overload Clutch
  — 1 hp Inverter Duty AC Brake Motor
- 1 hp AC Drive Package with Inverter Duty Motor and Inverter Drive (up to 60 cpm)
- 225-IOC Input Overload Clutch
- Digi-Dog Digital Programmable Limit Switch
- Camtronics Rotary Limit Switch

Standard Motion Sequence

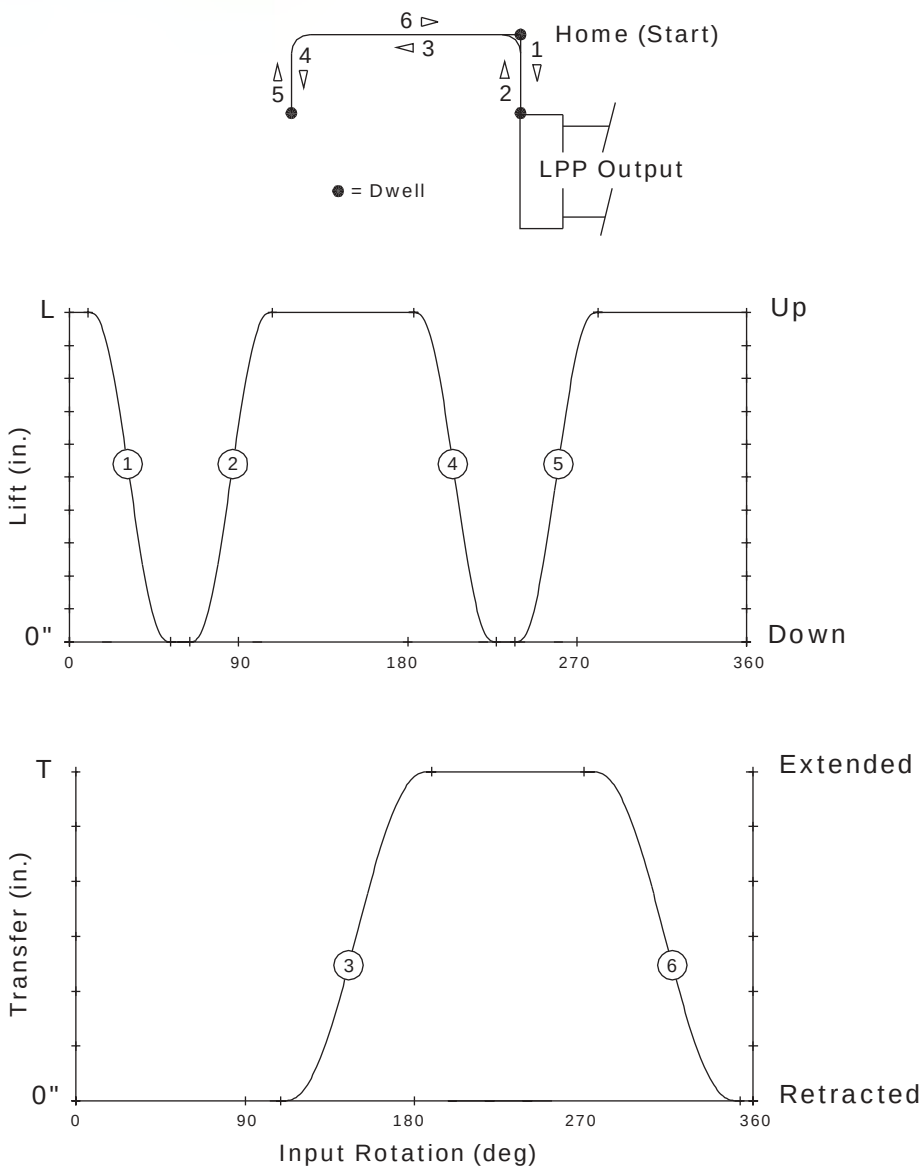

Motion Options

Standard starting position (home) at time 0 is at maximum lift (up) and fully retracted.

- The motion sequence can be mirrored in either the lift or transfer axes or in both axes.
  - — The mirrored lift starts in the down position.
  - — The mirrored transfer starts extended.
- Custom motion times are also available – consult your Sales Agent for more information.

HD-LPP Ordering Procedure

1. Model Number
2. Input Shaft Rotation: CW or CCW
3. Lift and Transfer Distances (in.)
4. Motion Sequence & Home Position
   (standard is shown)

Position of Shafts

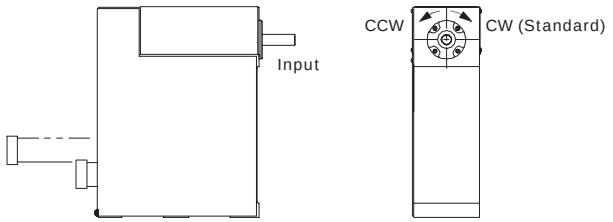

Standard Output Sequence

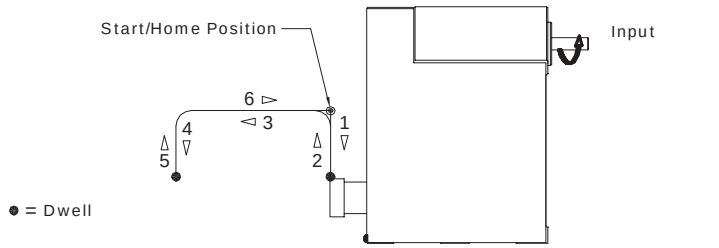

Indexer Mounting Position

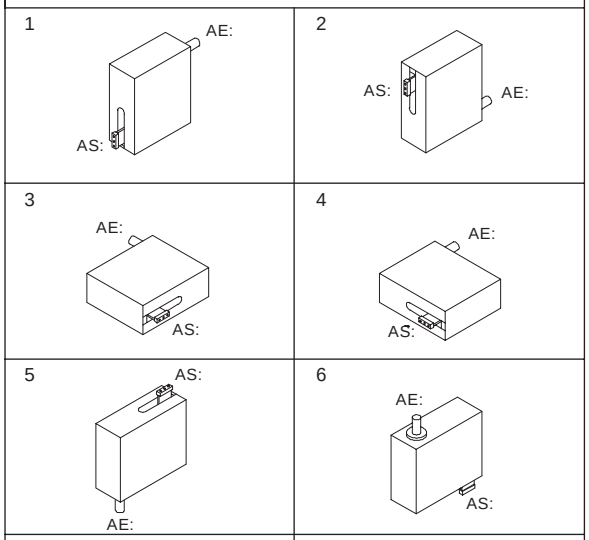

AE: Input Shaft	AS: Output Shaft

Drive Package Ordering Procedure

1. Reducer Model and Ratio
2. Reducer Mounting Position (A-H)
3. Motor Adaptor Model
4. Motor size

Reducer Mounting Position

A-1-LH	B-1-LH	C-1-LH	D-1-LH	E-1-RH	F-1-RH	G-1-RH	H-1-RH

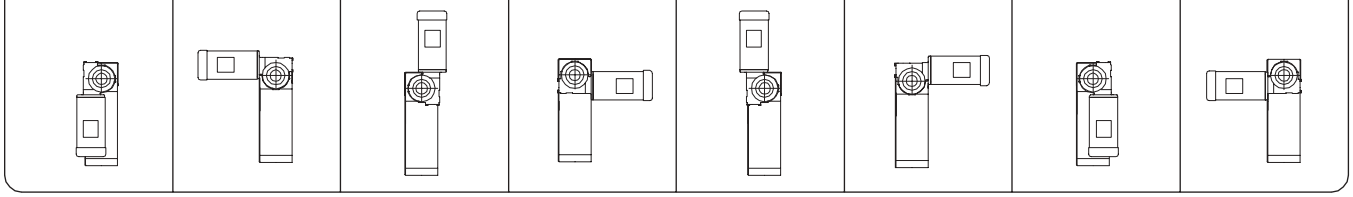

Mid-Range Linear Parts Handlers

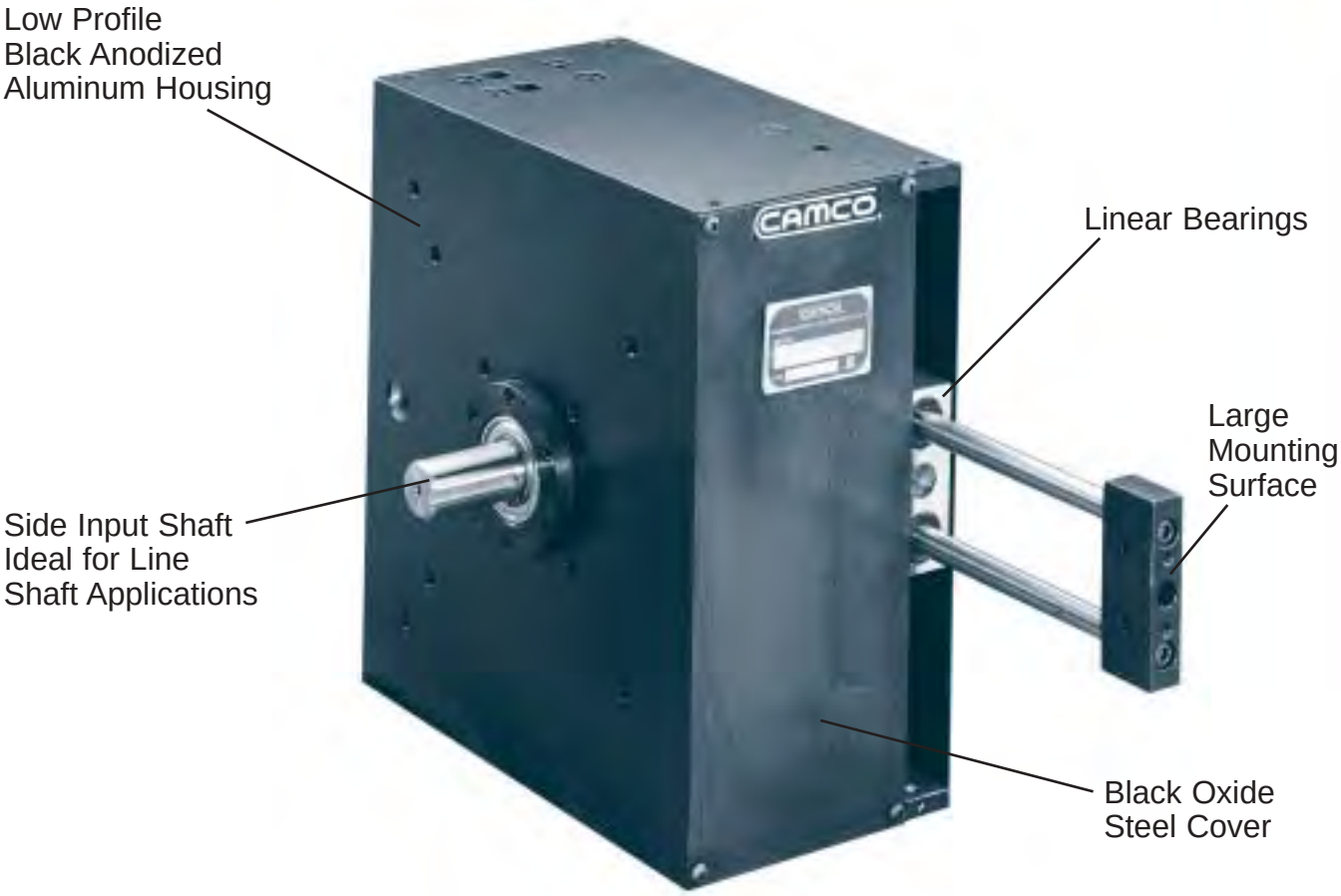

IMC **Mid-Range Linear Parts Handlers (MR-LPP)** are ideal for linear pick and place motions. With the input shaft extending from the side of the unit, multiple units can be placed side-by-side and line shaft driven with timing belts and pulleys.

- Lift and Transfer strokes can be adjusted in the field in 10 mm increments.
- Hardened and ground cams drive both axes.
- Preloaded, precision cam followers eliminate backlash and ensure smooth movement.
- Preloaded bushings (re-circulating ball type) support the internal carriage that drives the customer mounting surface. The ball bushings ride on hardened shafts providing stability and stiffness.
- Camshaft bearings are preloaded taper roller bearings.
- Compact Design
- Long-Life Grease Lubrication

LPP-101

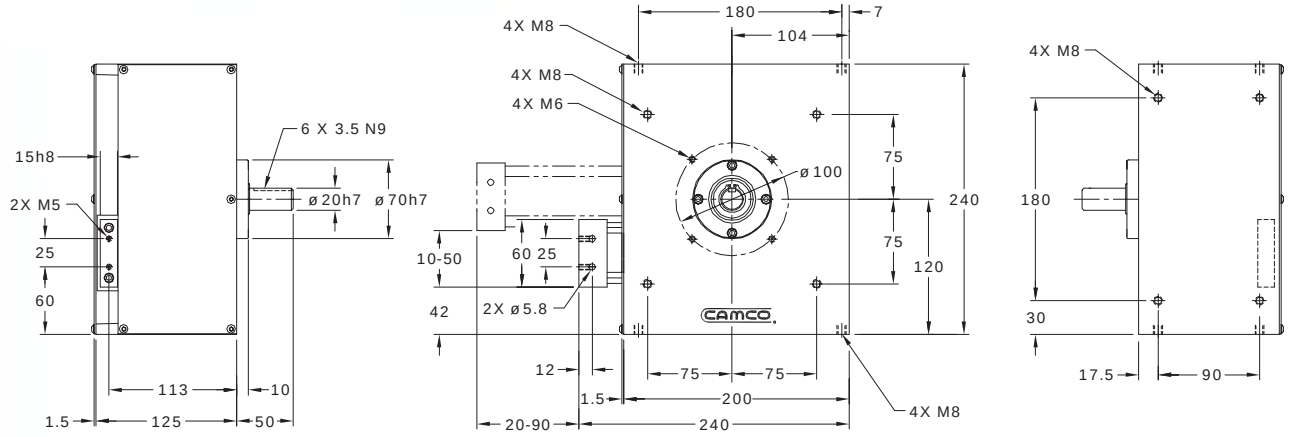

All dimensions are subject to change. For actual dimensions, please request the current drawing from IMC.

I

Standard Motions

Any combination of Lift and Transfer distances

Lift Distance (mm)	10, 20, 30, 40, 50
Transfer Distance (mm)	20, 30, 40, 50, 60, 70, 80, 90

Technical Specifications

Lift Accuracy	±0.25mm
Lift Repeatability	±0.03mm
Transfer Accuracy	±0.64mm
Transfer Repeatability	±0.12mm

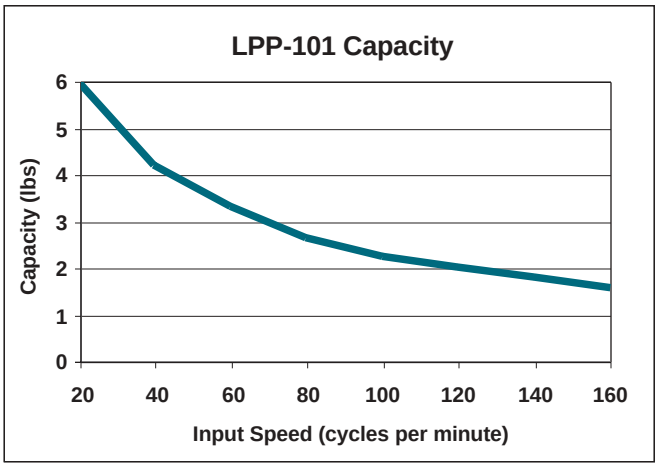

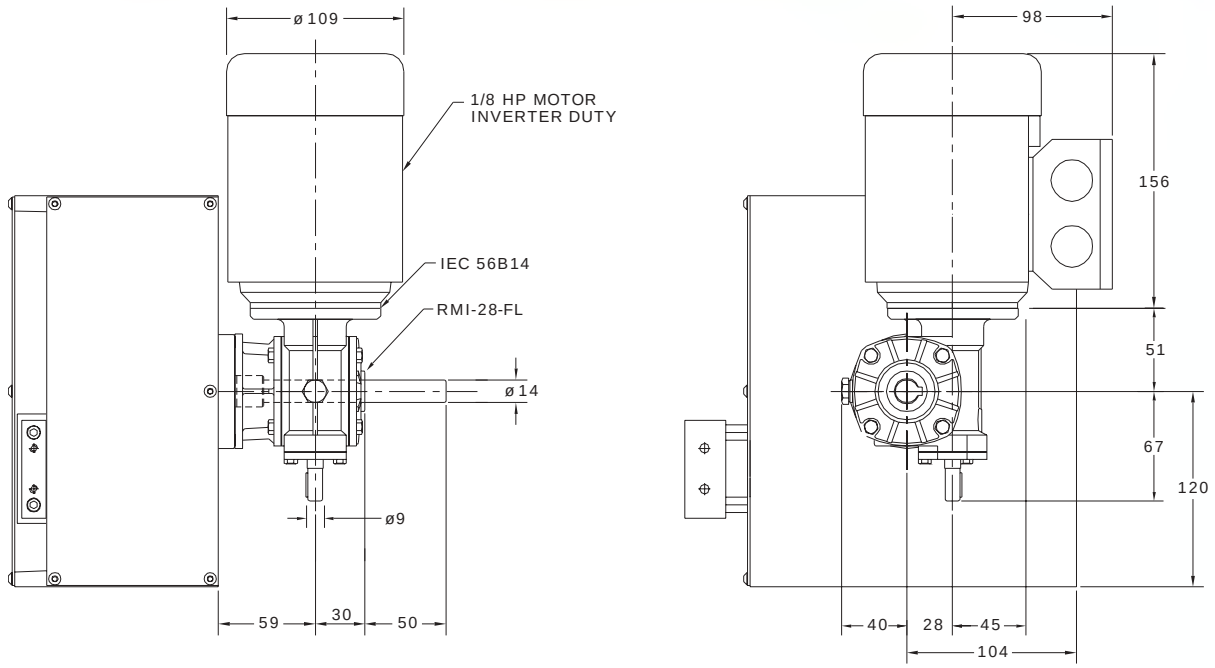

All dimensions are subject to change. For actual dimensions, please request the current drawing from IMC.

Standard Package

- RMI-28-FL Reducer
  - — Ratios from 7:1 to 100:1
  - — IEC 56B14 Adapter
- 1/8 hp Inverter Duty AC Motor

Optional Accessories

- AC Inverter Duty Motor with Inverter Drive (up to 60 cpm)
- Digi-Dog Digital Programmable Limit Switch
- Camtronics Rotary Limit Switch

LPP-201

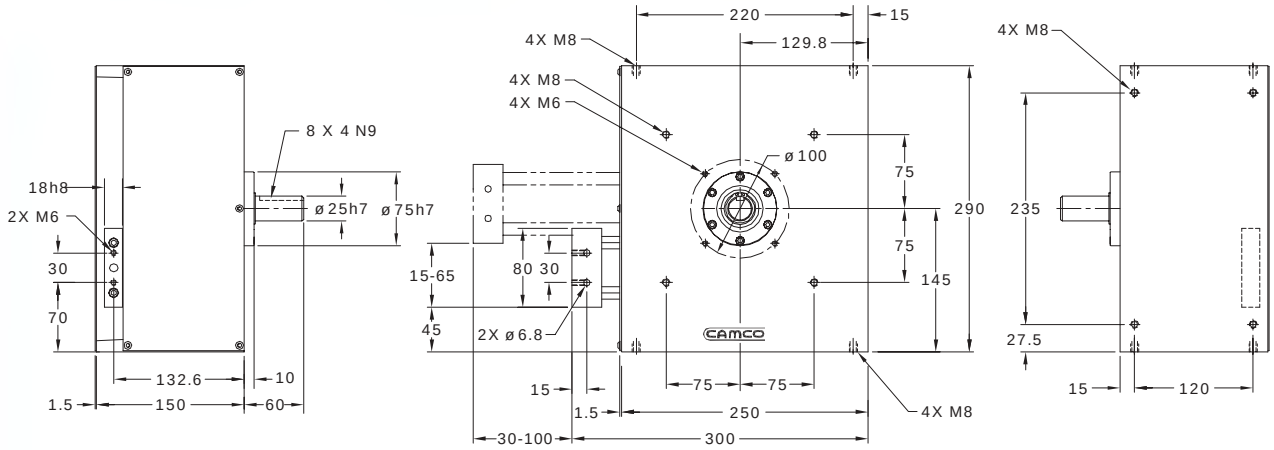

All dimensions are subject to change. For actual dimensions, please request the current drawing from IMC.

I

Standard Motions

Any combination of Lift and Transfer distances

Lift Distance (mm)	15, 25, 35, 45, 55, 65
Transfer Distance (mm)	30, 40, 50, 60, 70, 80, 90, 100

Technical Specifications

Lift Accuracy	±0.25mm
Lift Repeatability	±0.03mm
Transfer Accuracy	±0.64mm
Transfer Repeatability	±0.12mm

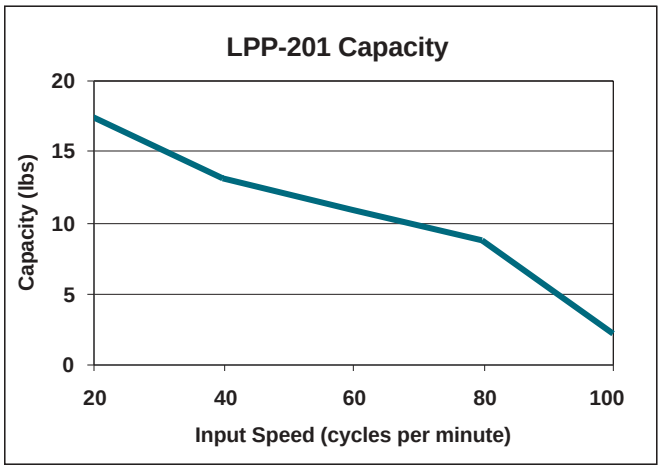

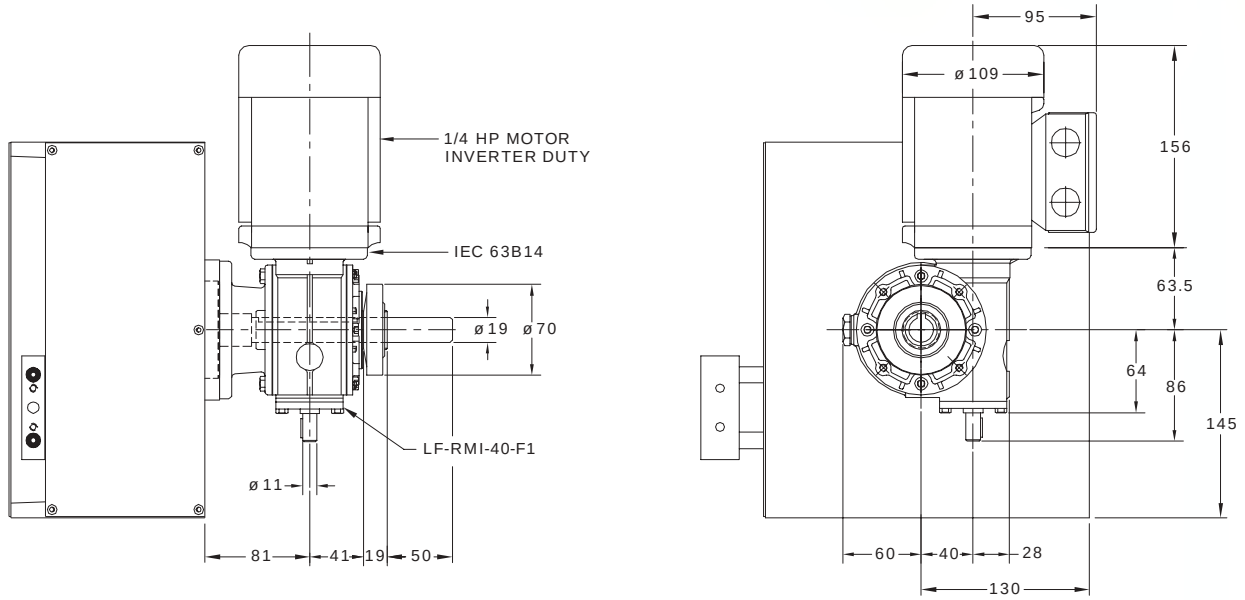

All dimensions are subject to change. For actual dimensions, please request the current drawing from IMC.

Standard Package

- RMI-40-F1 Reducer
  - — Ratios from 7:1 to 100:1
  - — IEC 63B5 Adapter
- 1/4 hp Inverter Duty AC Motor

Optional Accessories

- Internal Overload Clutch for Reducer
- AC Inverter Duty Motor with Inverter Drive (up to 60 cpm)
- Digi-Dog Digital Programmable Limit Switch
- Camtronics Rotary Limit Switch

LPP-301

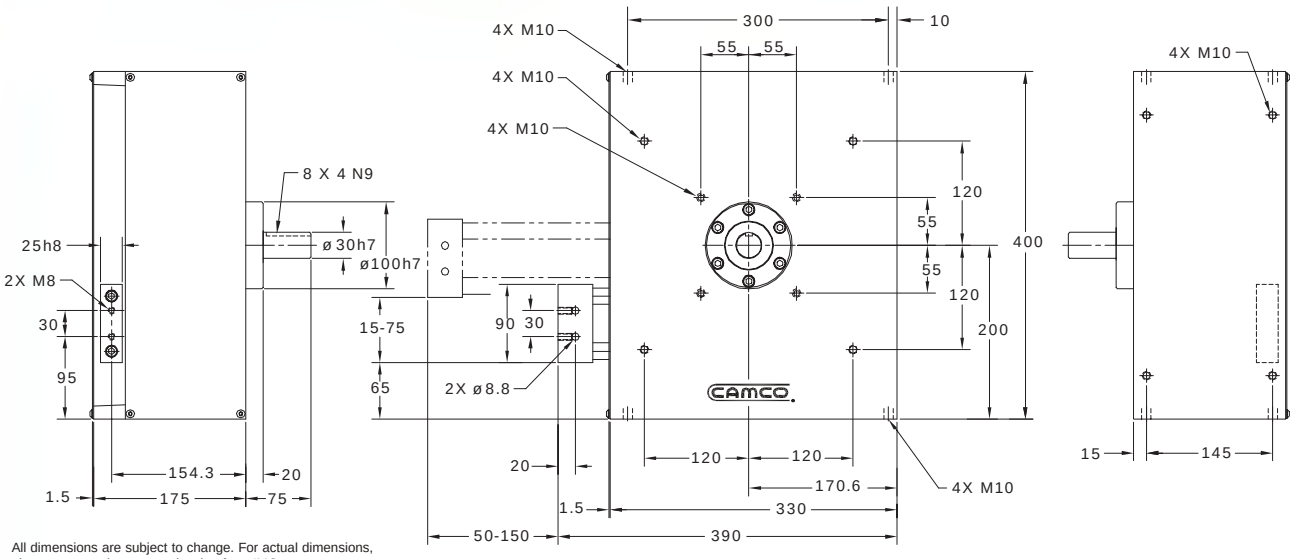

All dimensions are subject to change. For actual dimensions, please request the current drawing from IMC.

I

Standard Motions

Any combination of Lift and Transfer distances

Lift Distance (mm)	15, 25, 35, 45, 55, 65, 75
Transfer Distance (mm)	50, 70, 90, 110, 130, 150

Technical Specifications

Lift Accuracy	±0.25mm
Lift Repeatability	±0.03mm
Transfer Accuracy	±0.64mm
Transfer Repeatability	±0.12mm

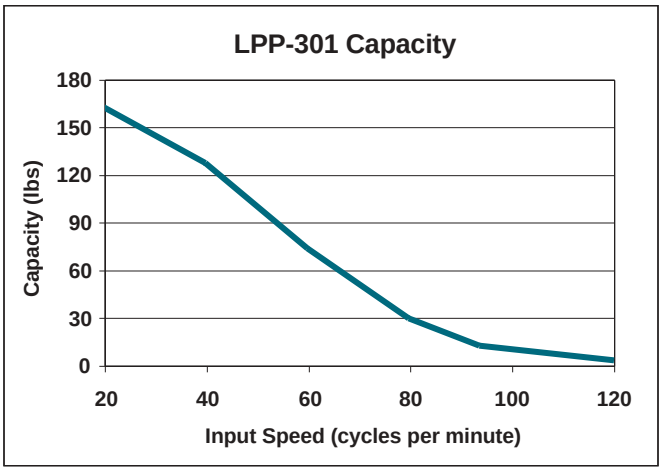

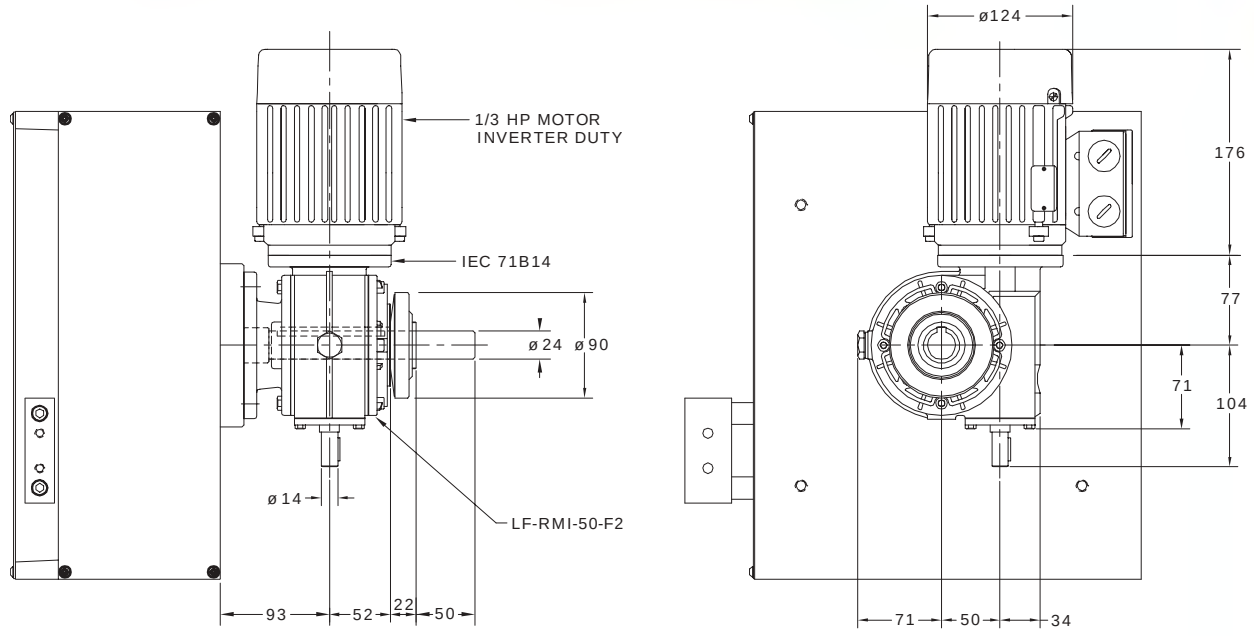

All dimensions are subject to change. For actual dimensions, please request the current drawing from IMC.

Standard Package

- RMI-50-F2 Reducer
  - — Ratios from 7:1 to 100:1
  - — IEC 71B5 Adapter
- 1/2 hp Inverter Duty AC Motor

Optional Accessories

- Internal Overload Clutch for Reducer
- AC Inverter Duty Motor with Inverter Drive (up to 60 cpm)
- Digi-Dog Digital Programmable Limit Switch
- Camtronics Rotary Limit Switch

LPP-401

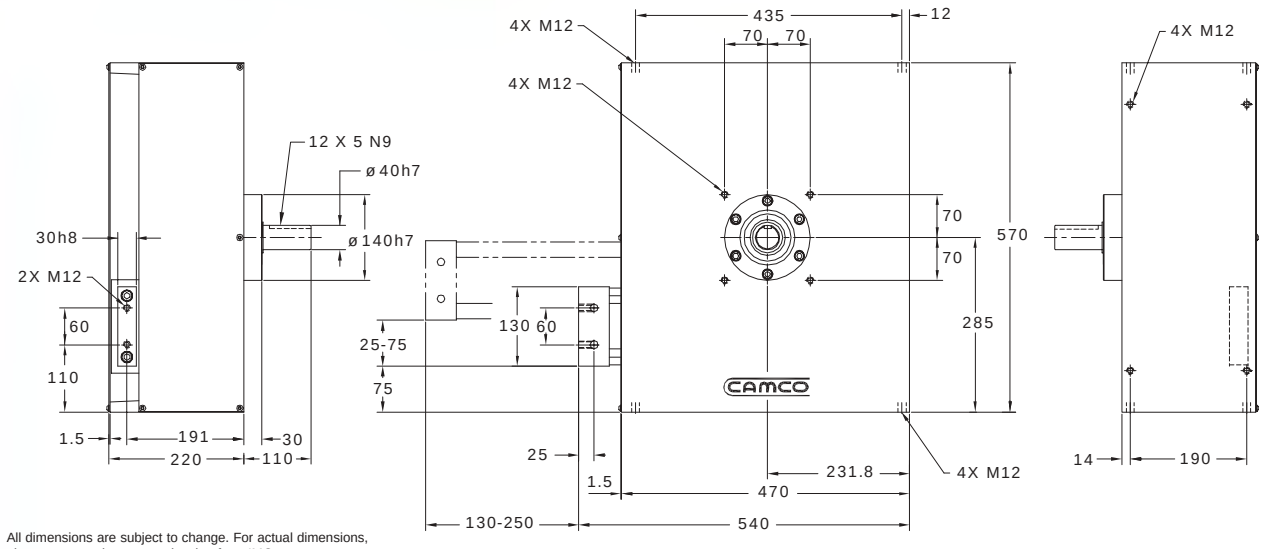

All dimensions are subject to change. For actual dimensions, please request the current drawing from IMC.

I

Standard Motions

Any combination of Lift and Transfer distances

Lift Distance (mm)	25, 35, 45, 55, 65, 75
Transfer Distance (mm)	130, 150, 170, 190, 210, 230, 250

Technical Specifications

Lift Accuracy	±0.25mm
Lift Repeatability	±0.03mm
Transfer Accuracy	±0.64mm
Transfer Repeatability	±0.12mm

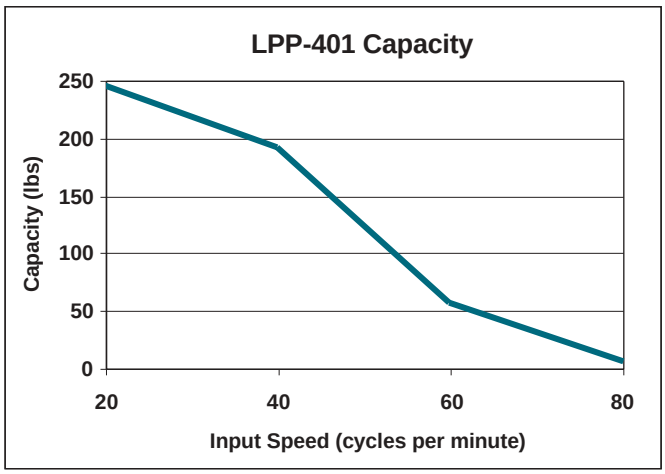

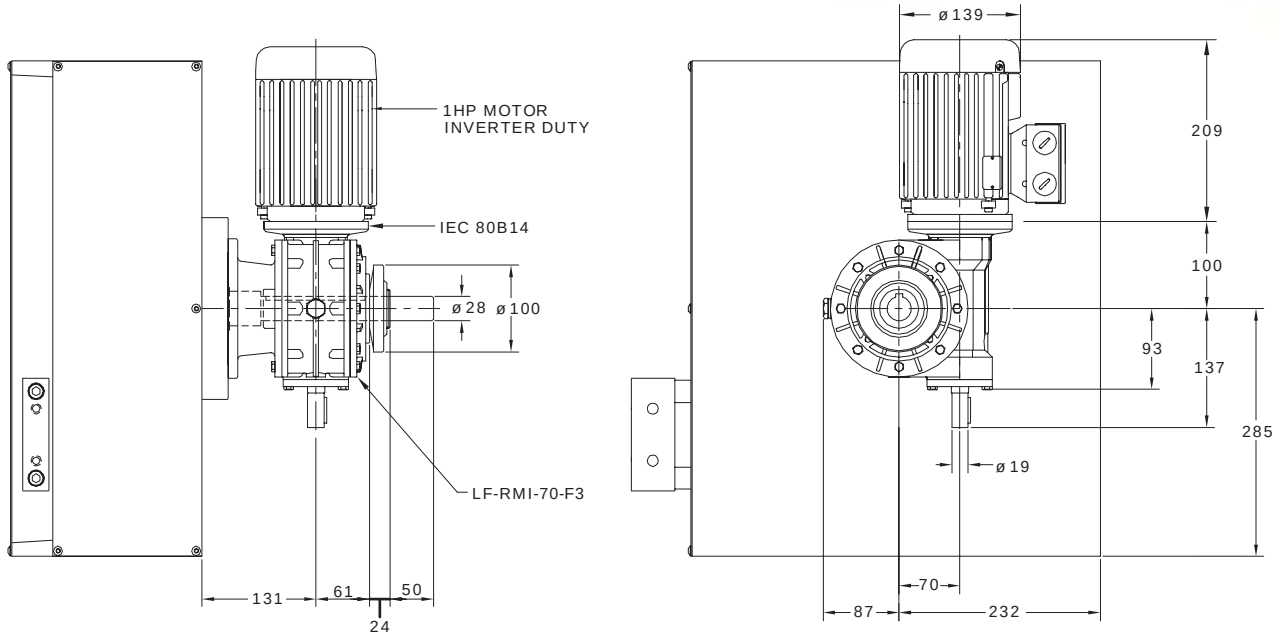

All dimensions are subject to change. For actual dimensions, please request the current drawing from IMC.

Standard Package

- RMI-50-F2 Reducer
  - — Ratios from 7:1 to 100:1
  - — IEC 71B5 Adapter
- 1/2 hp Inverter Duty AC Motor

Optional Accessories

- Internal Overload Clutch for Reducer
- AC Inverter Duty Motor with Inverter Drive (up to 60 cpm)
- Digi-Dog Digital Programmable Limit Switch
- Camtronics Rotary Limit Switch

Standard Motion Sequence

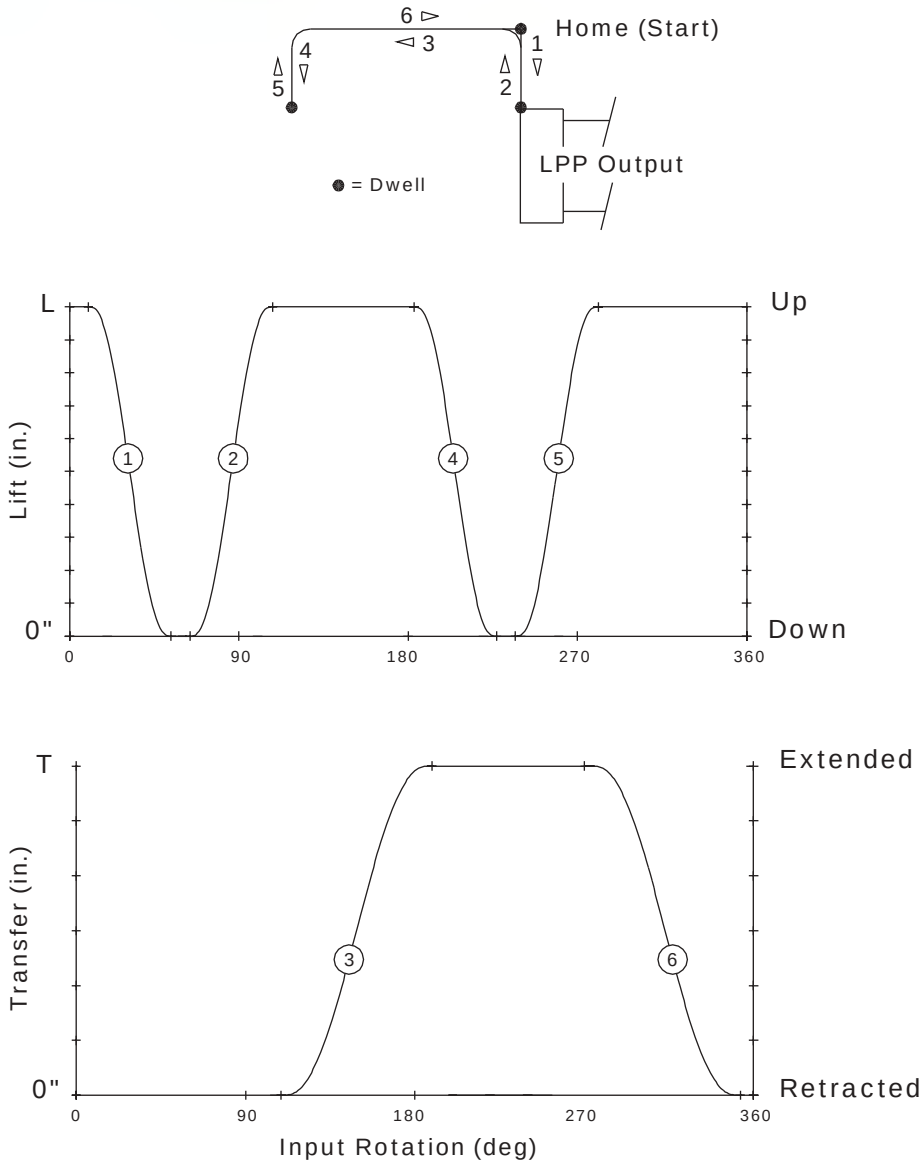

Motion Options

Standard starting position (home) at time 0 is at maximum lift (up) and fully retracted.

- The motion sequence can be mirrored in either the lift or transfer axes or in both axes.
  - — The mirrored lift starts in the down position.
  - — The mirrored transfer starts extended.
- Custom motion times are also available – consult your Sales Agent for more information.

MR-LPP Ordering Procedure

1. Model Number
2. Lift and Transfer Distances (mm)
3. Motion Sequence & Home Position
   (standard is shown)

Position of Shafts

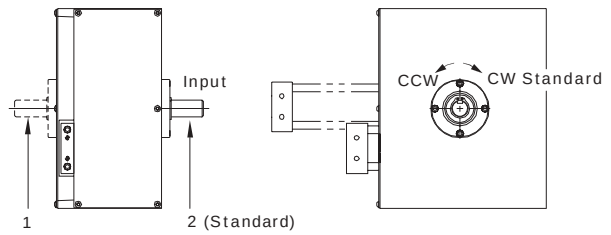

Standard Output Sequence

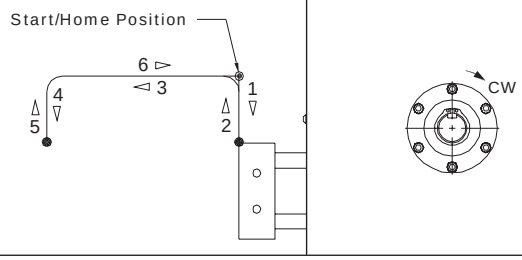

Indexer Mounting Position

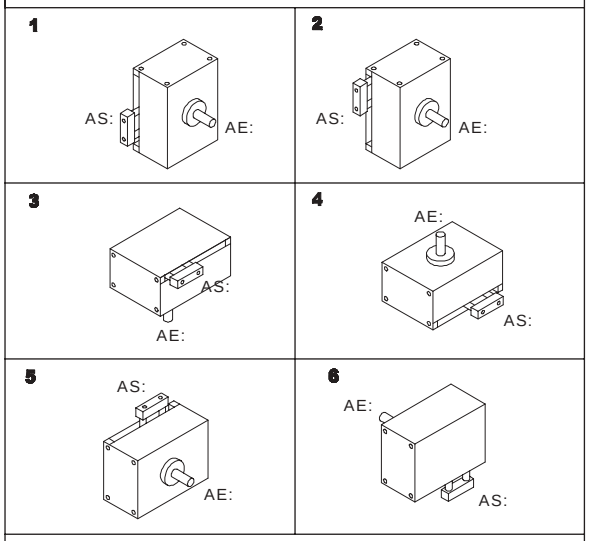

AE: Input Shaft AS: Output Shaft

Drive Package Ordering Procedure

1. Reducer Model, Ratio and Mounting Position
2. Motor Adaptor Model
3. Motor size

Reducer Mounting Position

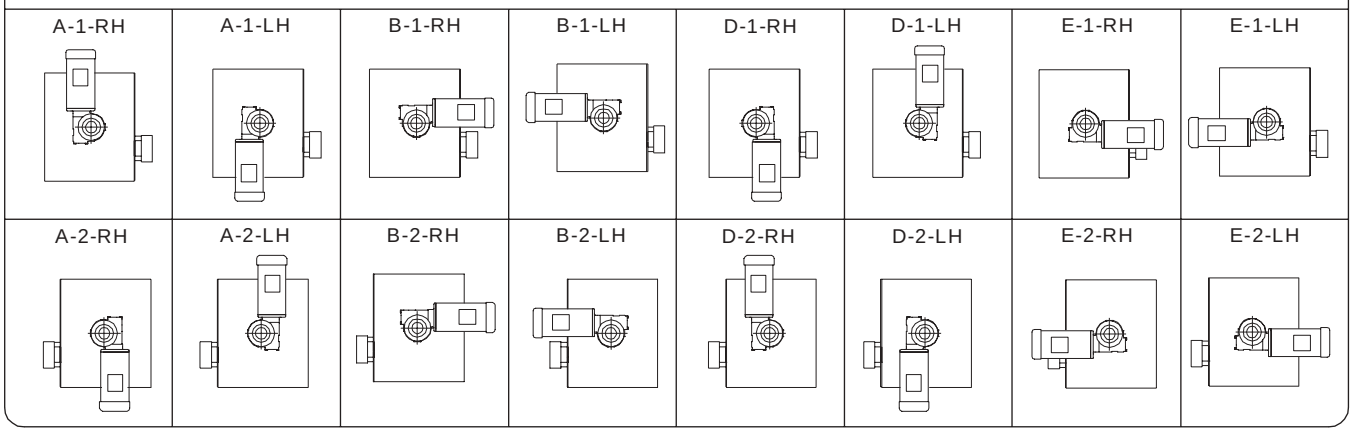

WBD Walking Beam Drives

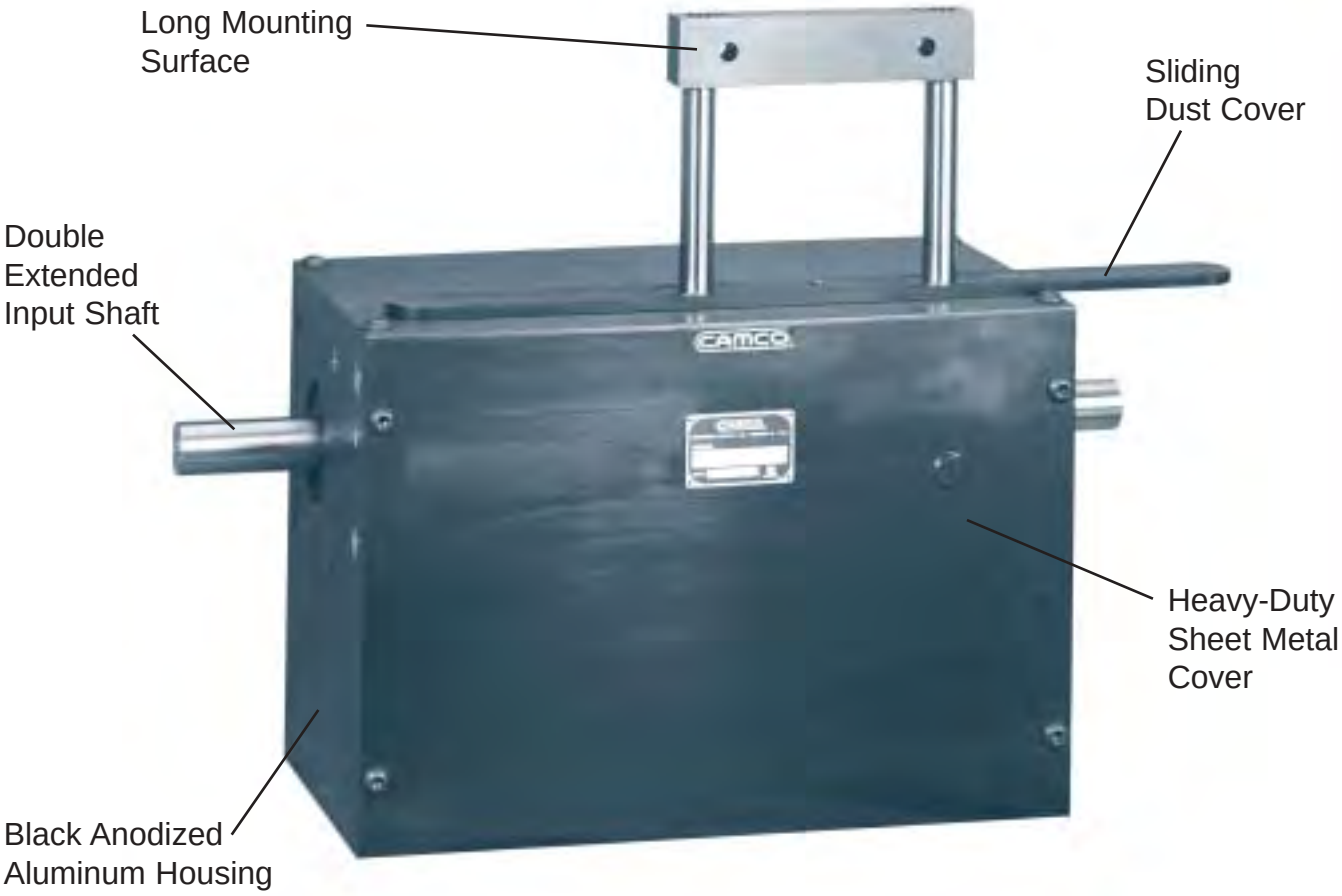

The IMC **Walking Beam Drive (WBD)** part handlers are rugged and precise cam operated mechanisms engineered for a minimum of 8000 hours of maintenance free life. A proven global design, there are several thousand drives used in automotive, packaging, electronics and many other industries.

IMC Walking Beam Drives provide the basis for highly accurate linear motion. The WBD is an economical alternative to a short precision link conveyor. It can also be used as a linear parts handler or a single axis actuator. Other features include:

- Hardened and ground cams drive both axes.
- Preloaded, precision cam followers eliminate backlash and ensure smooth movement.
- Preloaded bushings (re-circulating ball type) support the internal carriage that drives the customer mounting surface. The ball bushings ride on hardened shafts providing stability and stiffness.
- Preloaded taper roller bearings on Camshaft.
- Compact Design
- Long-Life Grease Lubrication
- Preloaded dust cover and shaft seals keep the internal mechanism clean.

WBD-101

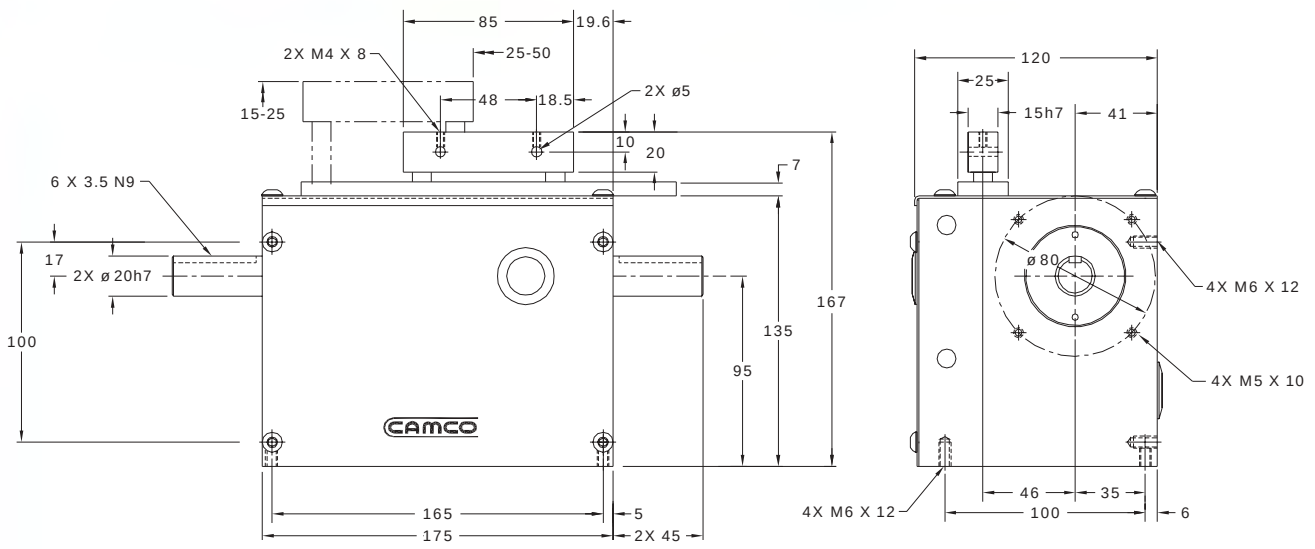

All dimensions are subject to change. For actual dimensions, please request the current drawing from IMC.

I

Standard Motions

Any combination of Lift and Transfer distances

Lift Distance (mm)	15, 20, 25
Transfer Distance (mm)	25, 38, 50

Technical Specifications

Lift Accuracy	±0.25mm
Lift Repeatability	±0.05mm
Transfer Accuracy	±0.13mm
Transfer Repeatability	±0.05mm

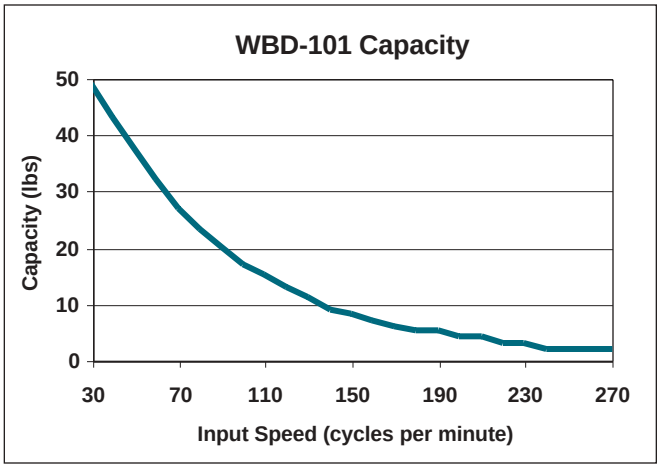

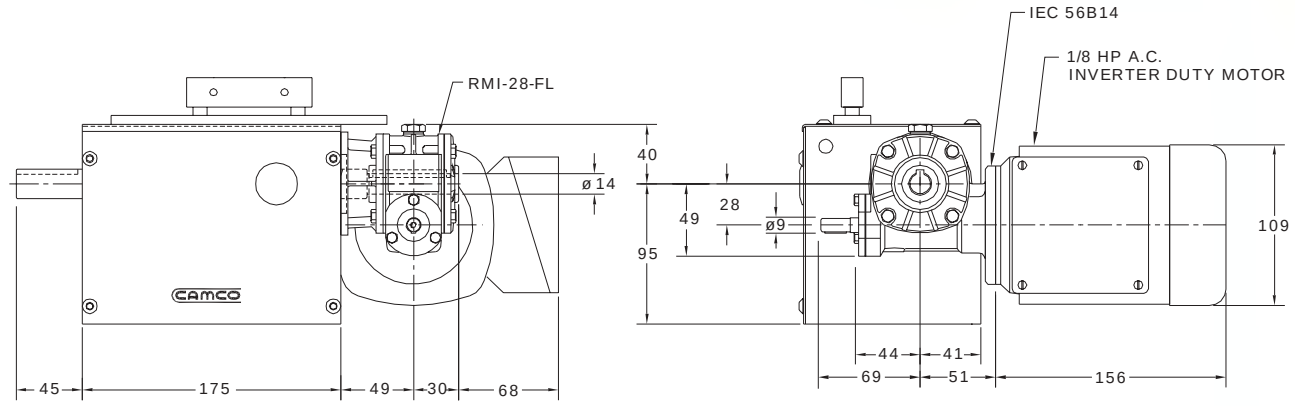

All dimensions are subject to change. For actual dimensions, please request the current drawing from IMC.

Standard Package

- RMI-28-FL reducer
  - — Ratios from 7:1 to 100:1
  - — IEC 56B14 adapter
- 1/8 hp Inverter Duty AC Motor
- Cycle Cam and Limit Switch

Optional Accessories

- AC Inverter Duty Motor with Inverter Drive (up to 60 cpm)
- Digi-Dog Digital Programmable Limit Switch
- Camtronics Rotary Limit Switch

WBD-201

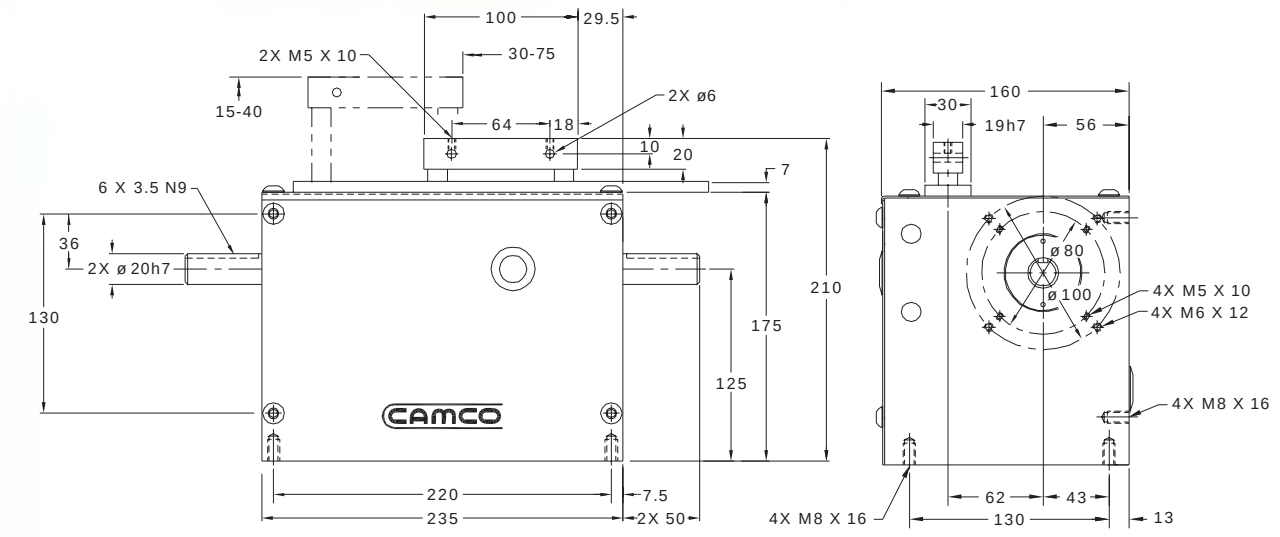

All dimensions are subject to change. For actual dimensions, please request the current drawing from IMC.

I

Standard Motions (Lift x Transfer)

15mm x 30mm
20mm x 40mm
25mm x 50mm
35mm x 65mm
40mm x 75mm

Technical Specifications

Lift Accuracy	±0.25mm
Lift Repeatability	±0.05mm
Transfer Accuracy	±0.13mm
Transfer Repeatability	±0.05mm

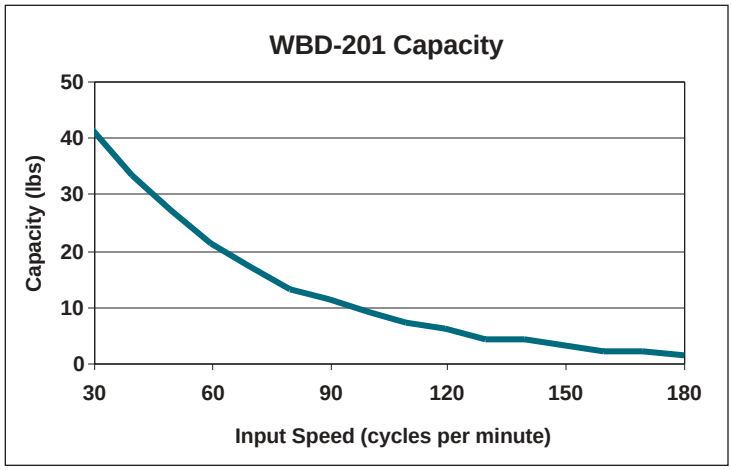

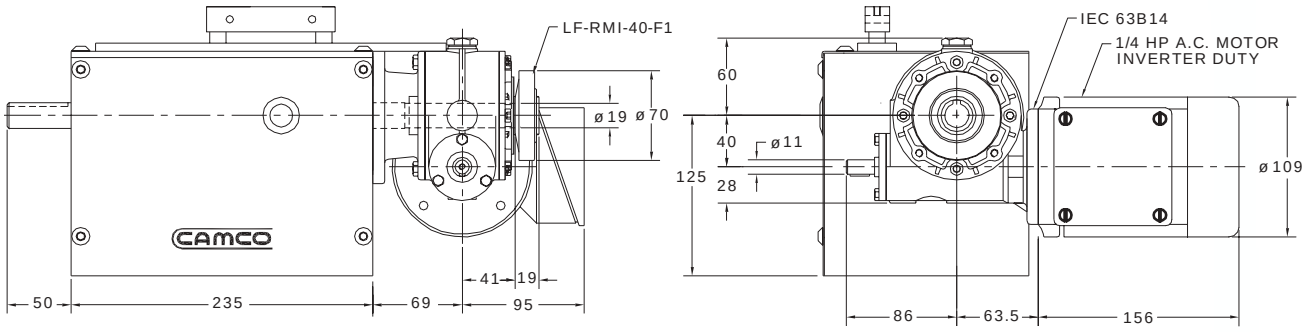

All dimensions are subject to change. For actual dimensions, please request the current drawing from IMC.

Standard Package

- RMI-40-F1 reducer
  - — Ratios from 7:1 to 100:1
  - — IEC 63B5 adapter
- 1/4 hp Inverter Duty AC Motor
- Cycle Cam and Limit Switch

Optional Accessories

- Internal Overload Clutch for Reducer
- AC Inverter Duty Motor with Inverter Drive (up to 60 cpm)
- Digi-Dog Digital Programmable Limit Switch
- Camtronics Rotary Limit Switch

WBD-301

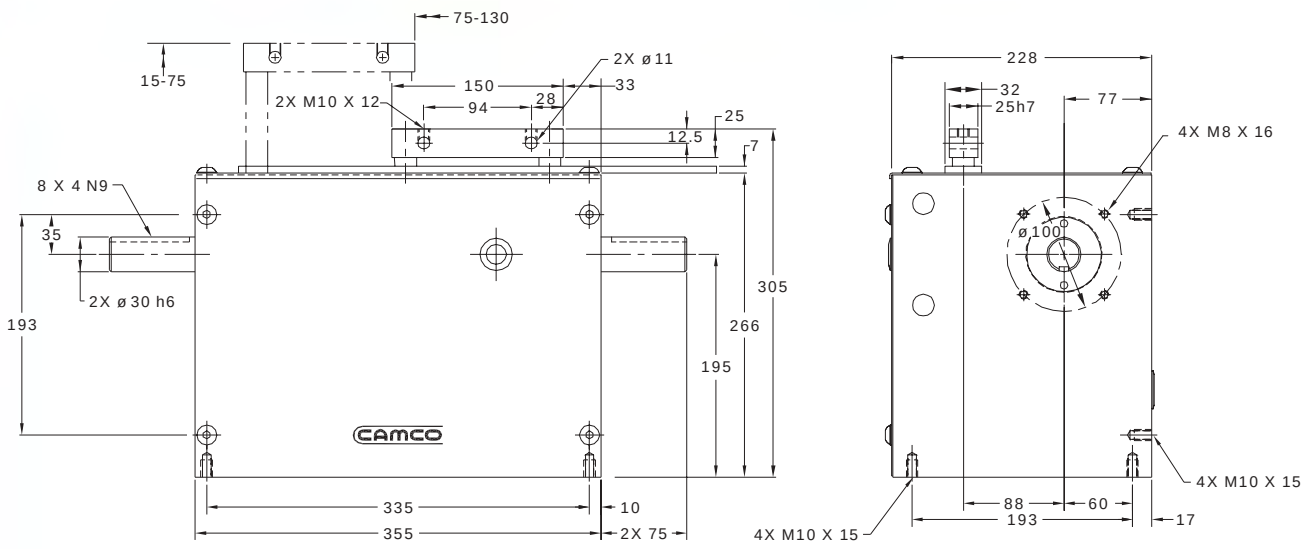

All dimensions are subject to change. For actual dimensions, please request the current drawing from IMC.

I

Standard Motions (Lift x Transfer)

50mm x 75mm	15mm x 130mm
15mm x 100mm	25mm x 130mm
25mm x 100mm	40mm x 130mm
40mm x 100mm	50mm x 130mm
50mm x 100mm	75mm x 130mm
75mm x 100mm	

Technical Specifications

Lift Accuracy	±0.25mm
Lift Repeatability	±0.05mm
Transfer Accuracy	±0.13mm
Transfer Repeatability	±0.05mm

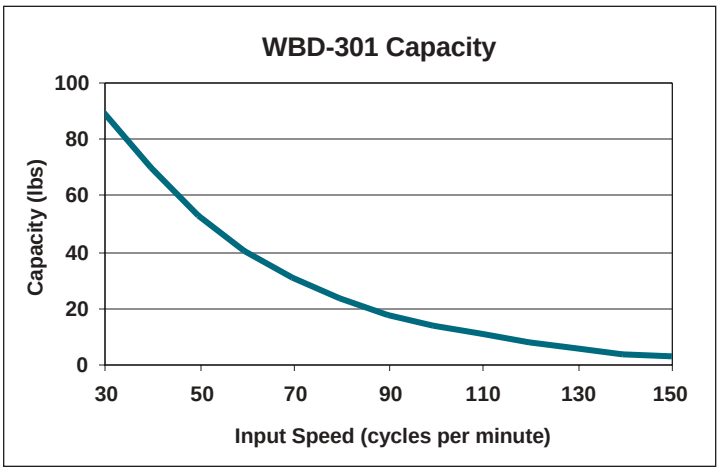

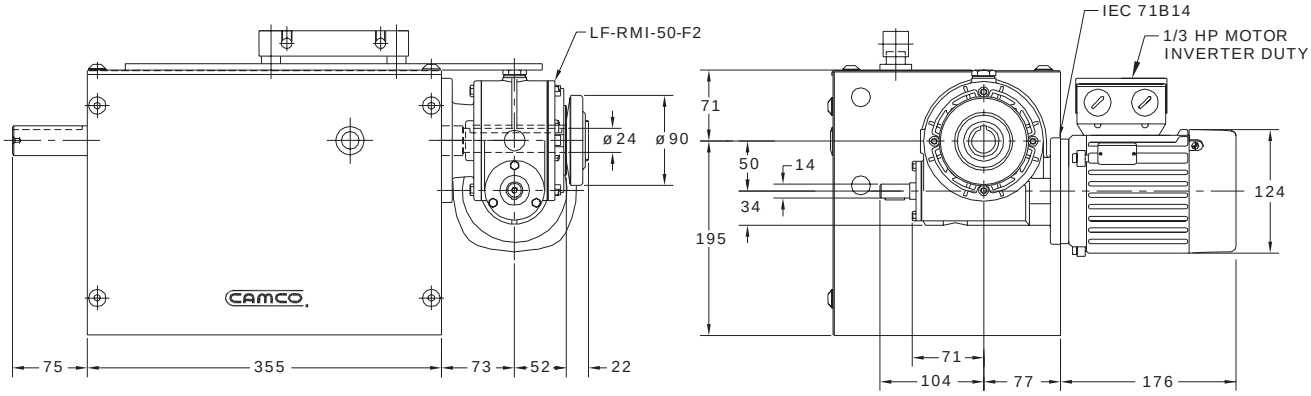

All dimensions are subject to change. For actual dimensions, please request the current drawing from IMC.

Standard Package

- RMI-50-F2 reducer
  - — Ratios from 7:1 to 100:1
  - — IEC 71B5 adapter
- 1/2 hp Inverter Duty AC Motor
- Cycle Cam and Limit Switch

Optional Accessories

- Internal Overload Clutch for Reducer
- AC Inverter Duty Motor with Inverter Drive (up to 60 cpm)
- Digi-Dog Digital Programmable Limit Switch
- Camtronics Rotary Limit Switch

WBD-401

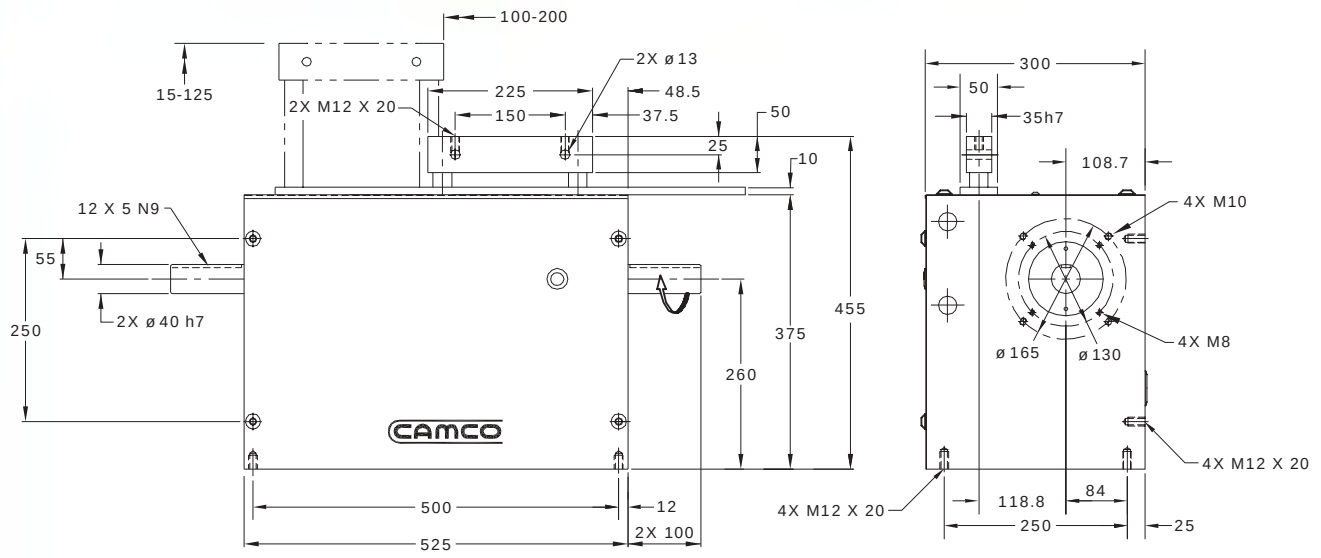

All dimensions are subject to change. For actual dimensions, please request the current drawing from IMC.

I

Standard Motions

Any combination of Lift and Transfer distances

Lift Distance (mm)	15, 25, 40, 50, 75, 100, 125
Transfer Distance (mm)	100, 125, 150, 200

Technical Specifications

Lift Accuracy	±0.25mm
Lift Repeatability	±0.05mm
Transfer Accuracy	±0.13mm
Transfer Repeatability	±0.05mm

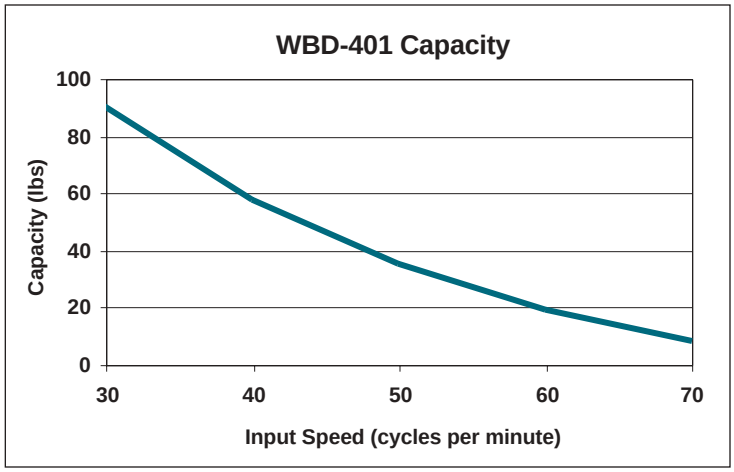

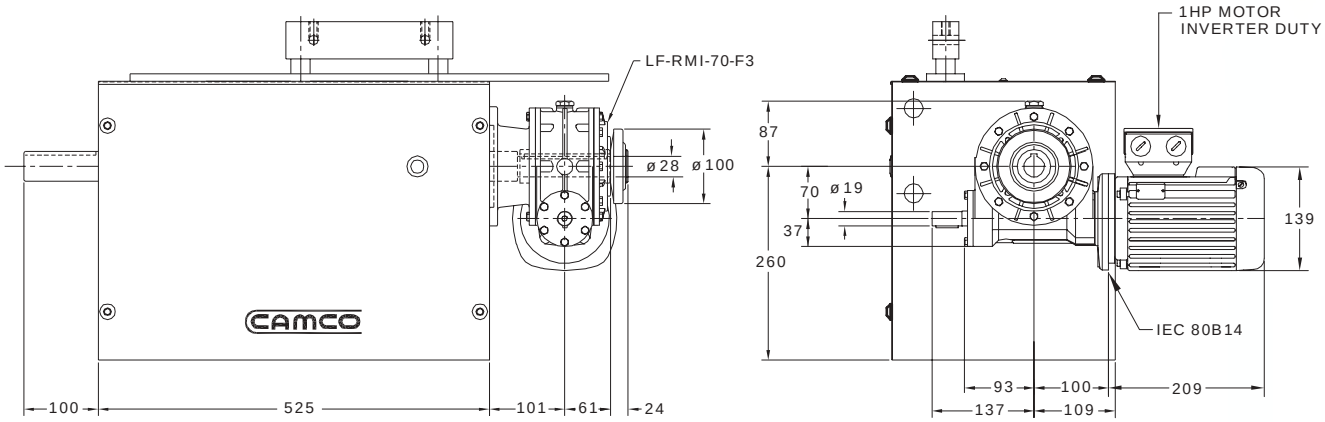

All dimensions are subject to change. For actual dimensions, please request the current drawing from IMC.

Standard Package

- RMI-70-F3 reducer
  - — Ratios from 7:1 to 100:1
  - — IEC 80B5 adapter
- 1 hp Inverter Duty AC Motor
- Cycle Cam and Limit Switch

Optional Accessories

- Internal Overload Clutch for Reducer
- AC Inverter Duty Motor with Inverter Drive (up to 60 cpm)
- Digi-Dog Digital Programmable Limit Switch
- Camtronics Rotary Limit Switch

WBD-501

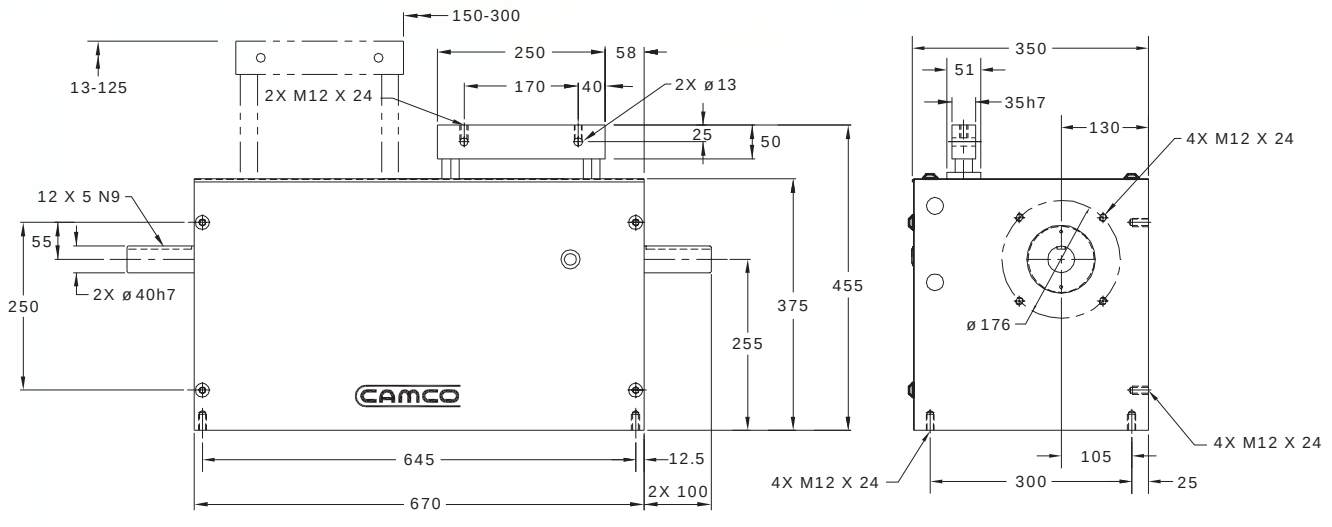

All dimensions are subject to change. For actual dimensions, please request the current drawing from IMC.

I

Standard Motions

Any combination of Lift and Transfer distances

Lift Distance (mm)	13, 25, 38, 50, 75, 100, 125
Transfer Distance (mm)	150, 200, 250, 300

Technical Specifications

Lift Accuracy	±0.30mm
Lift Repeatability	±0.10mm
Transfer Accuracy	±0.18mm
Transfer Repeatability	±0.10mm

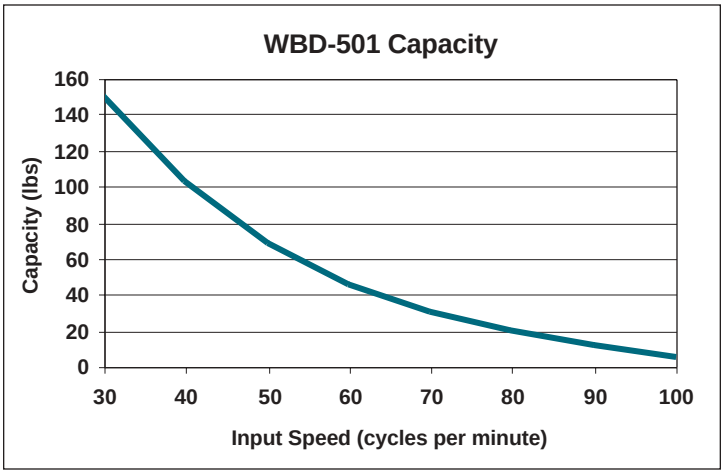

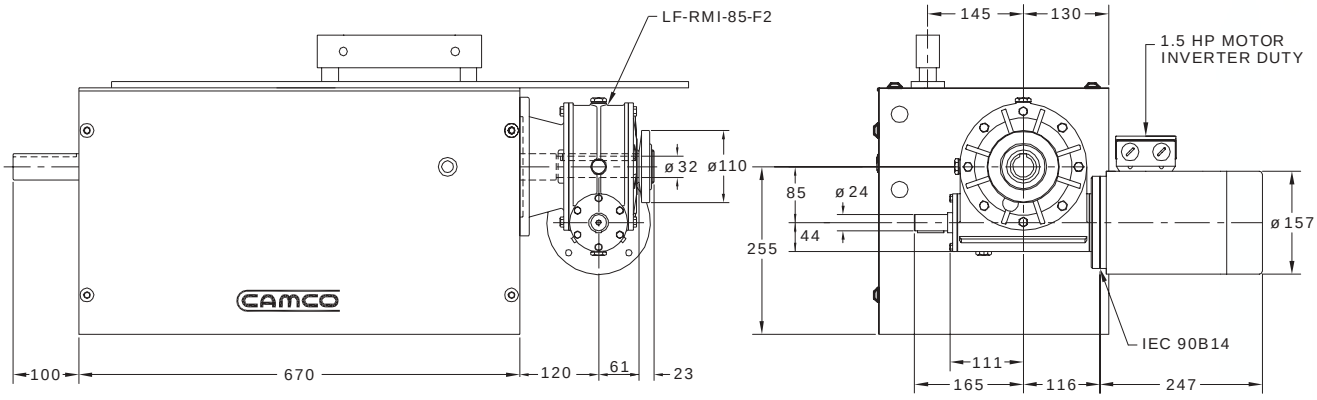

All dimensions are subject to change. For actual dimensions, please request the current drawing from IMC.

Standard Package

- RMI-70-F3 reducer
  - — Ratios from 7:1 to 100:1
  - — IEC 80B5 adapter
- 1 hp Inverter Duty AC Motor
- Cycle Cam and Limit Switch

Optional Accessories

- Internal Overload Clutch for Reducer
- AC Inverter Duty Motor with Inverter Drive (up to 60 cpm)
- Digi-Dog Digital Programmable Limit Switch
- Camtronics Rotary Limit Switch

Standard Motion Sequence

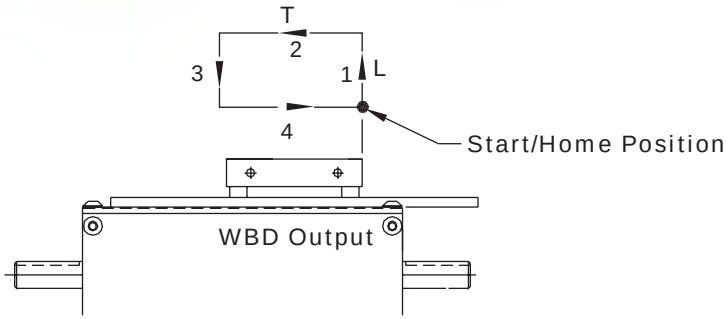

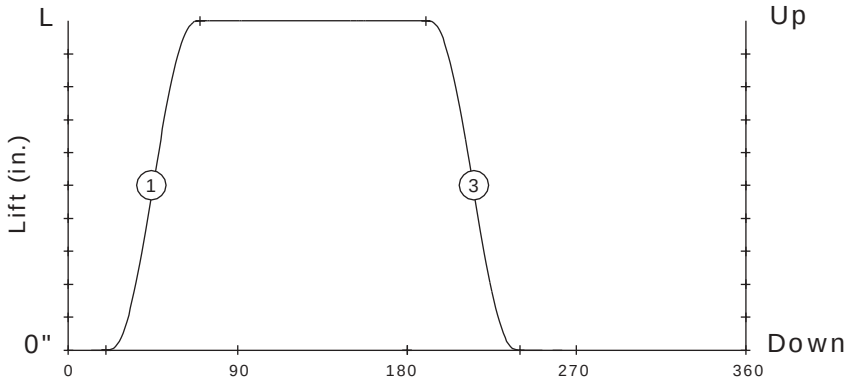

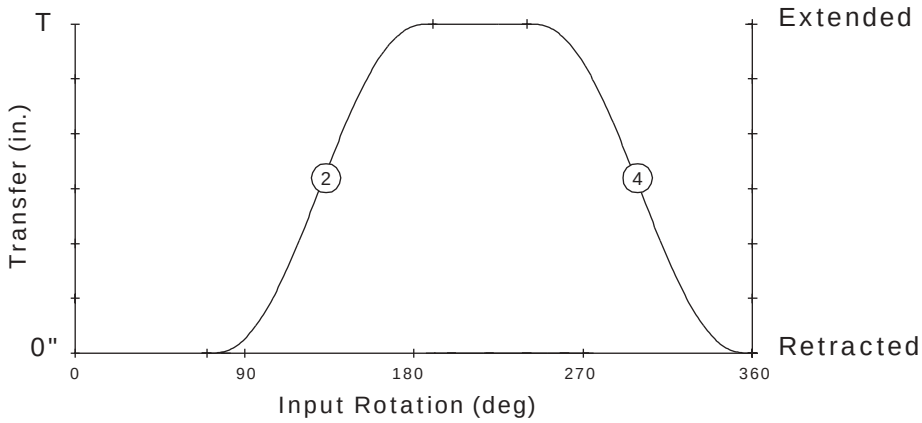

Motion Options

Standard starting position (home) at time 0° is down and fully retracted.

- The motion sequence can be mirrored in either the lift or transfer axes or in both axes.
  - — The mirrored lift starts in the up position.
  - — The mirrored transfer starts extended.
- Custom motion times are also available – consult your Sales Agent for more information.

WBD Ordering Procedure

1. Model Number
2. Lift and Transfer Distances (mm)
3. Motion Sequence & Home Position
   (standard is shown)

Position of Shafts

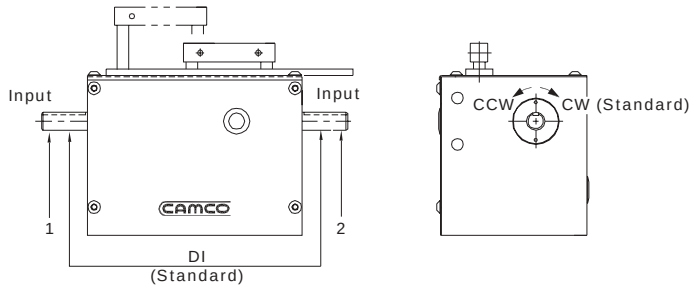

Standard Output Sequence

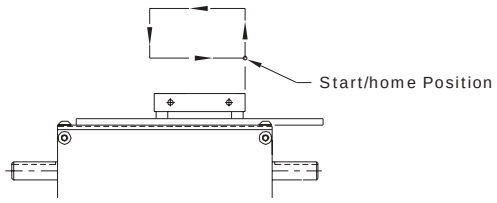

Indexer Mounting Position

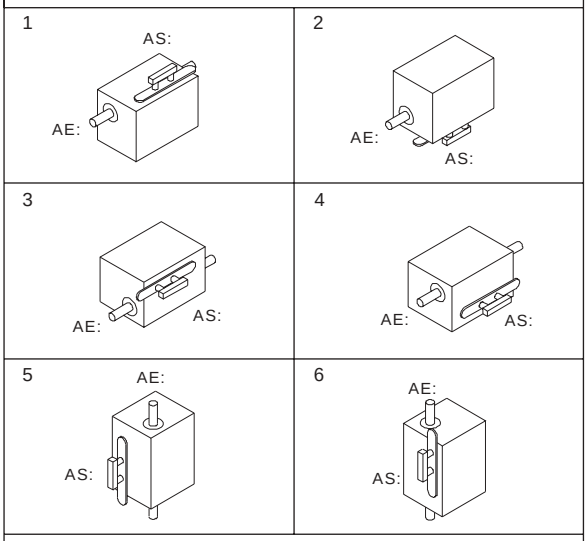

AE: Input Shaft AS: Output Shaft

Drive Package Ordering Procedure

1. Reducer Model, Ratio and Mounting Position
2. Motor Adaptor Model
3. Motor size

Reducer Mounting Position

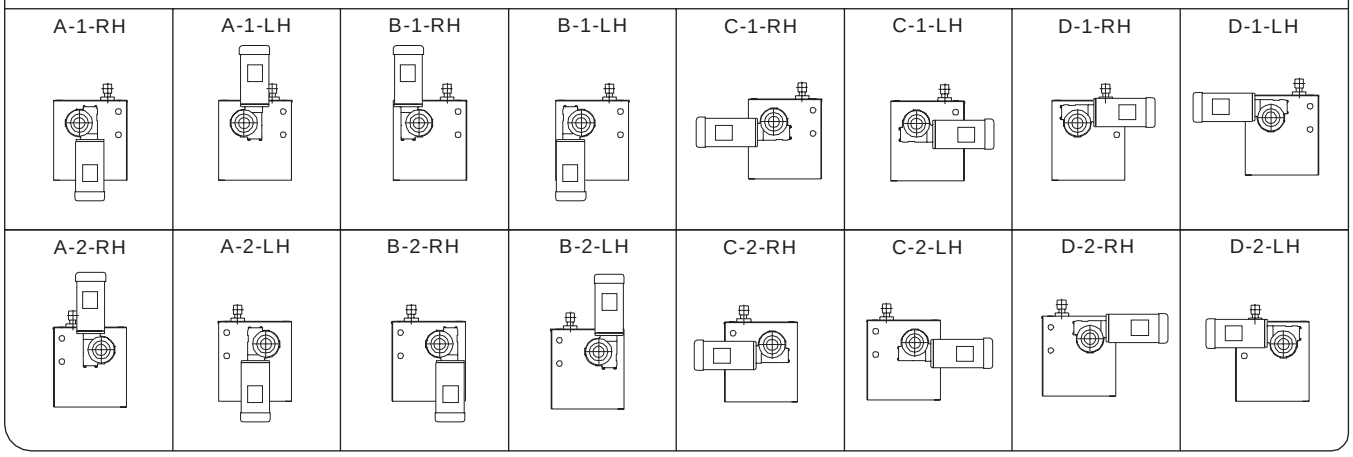

Precision Link Conveyors

INDUSTRIAL MOTION CONTROL, LLC.

CAMCO FERGUSON

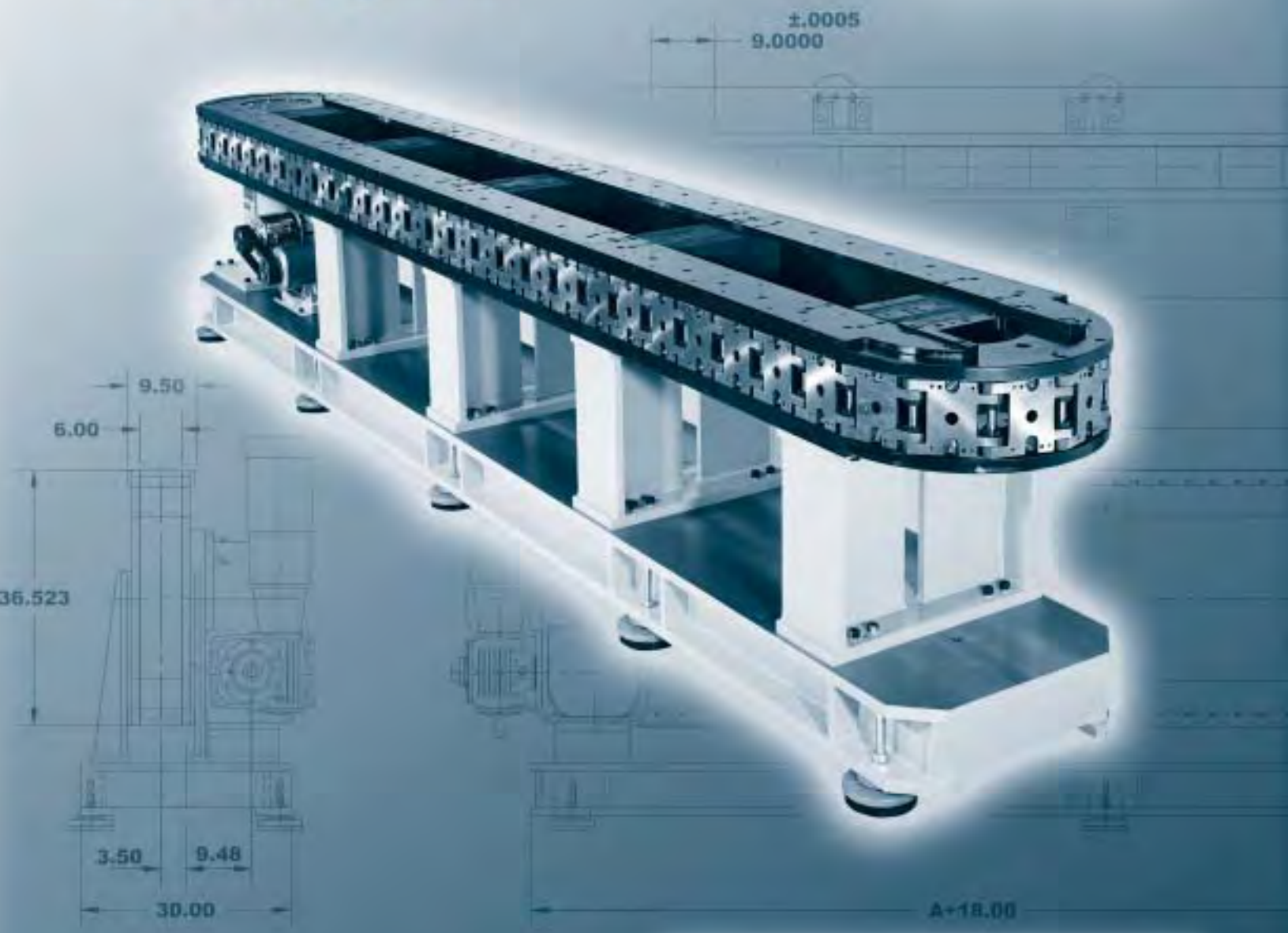

Features

IMC Precision Link Conveyors are ideal for linear transfer applications with features including:

- Table Top or Heavy Duty versions
- Precision positioning of parts for assembly or manufacturing processes
- High Speed station to station parts transfer
- Precision Links with roller bearings and precision ground cam followers for smooth transfer and long life
- Link size range to meet most application requirements
- Optional Bases, Line Shafts and Tooling Mounting Plates
- Complete with Motorized Index Drive system including transfer overload protection.

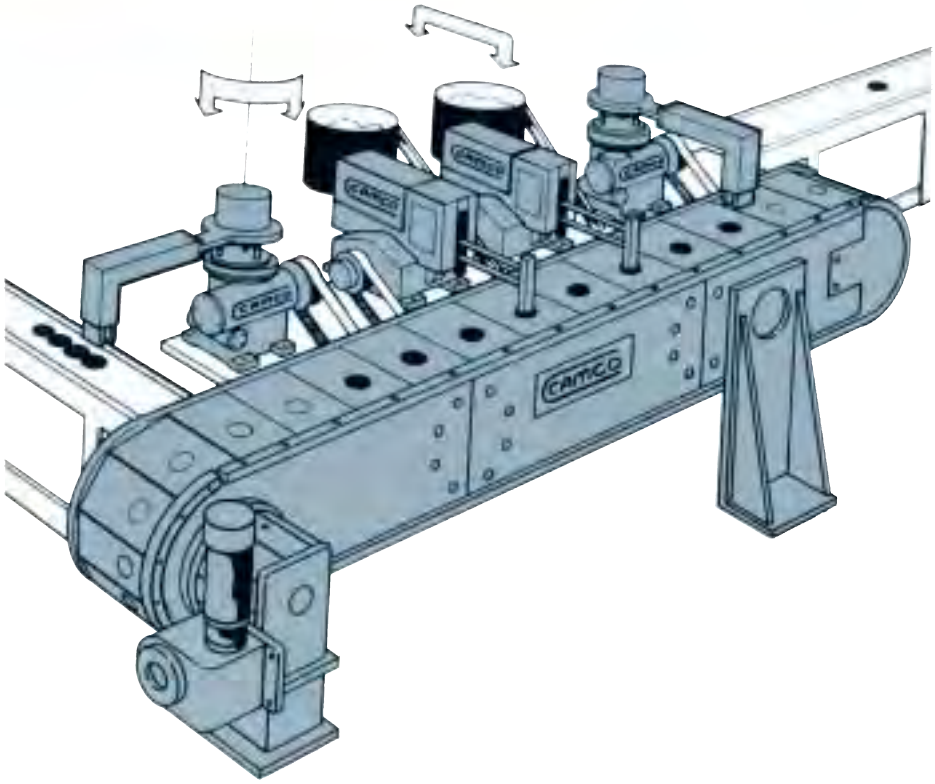

J

Precision Link Conveyors

IMC Precision Link Conveyors combine excellent accuracy and high load capability with versatility to meet any automation challenge. In combination with a IMC index drive package and IMC parts handlers, these conveyors can be relied on as the cornerstone of in-line automatic assembly applications.

High Speed and Accuracy

Precision-machined conveyor chain links are driven by a high-performance IMC Index Drive. The Conveyors are equipped with a precision machined chordal compensation cam which maintains a precise tension level in the link assembly at all times for high accuracy and speed capability

Versatility

Many Precision Link Conveyors features can be customized including conveyor length, index distance, index motion, link fixture mounting pattern, drive package component and drive package arrangement. In addition, custom options include tooling plates, line shafts, and custom bases.

Customization

To suit your needs, IMC will design and build your entiry precision conveyor sub-assembly, ready for your tooling. IMC parts handlers and auxiliary index drives can be mounted to work synchronously with the conveyor. IMC quality in every component ensures the highest accuracy and durability for your automation application.

Precision Links

Each link of a precision conveyor is machined to IMC's exacting standards. Roller bearings are built into the link for smooth pivotal action between each link. Precise positioning is guaranteed by hardened ground cam followers pre-loaded against precision ground tracks in the conveyor body. All bearings are greased and sealed for ease of maintenance and extended life.

Easy to Tool

Optional tooling and parts handler mounting surfaces are available for easy, convenient machine building.

Compact Design

In-line design saves floor space and provides maximum accessibility for tooling. Both Over/Under and Carousel design are available in lengths to meet your needs.

Table Top Precision Link Conveyors

IMC Table Top Precision Link Conveyors are available in a variety of standard configurations. Standard link lengths include: 1.5", 2.0", 3.0", 4.5" and 6.0".
Table Top Conveyor Modules are available with and without a drive package. They can be oriented in any direction without affecting capacity, accuracy or ease of maintenance. Typically, they are mounted directly to the top surface or wall of your machined base.
Table Top Conveyor drive packages feature a shrink-disk mounted output overload clutch offering a zero-backlash connection between the indexer and the conveyor. It also provides phase adjustability and added protection for the indexer.

The Table Top Conveyor configurations shown here are intended as a general guideline in the design of your automation system. Your IMC Sales Agent will help you determine any options or customer modification you may require.

1.5 Basic Module

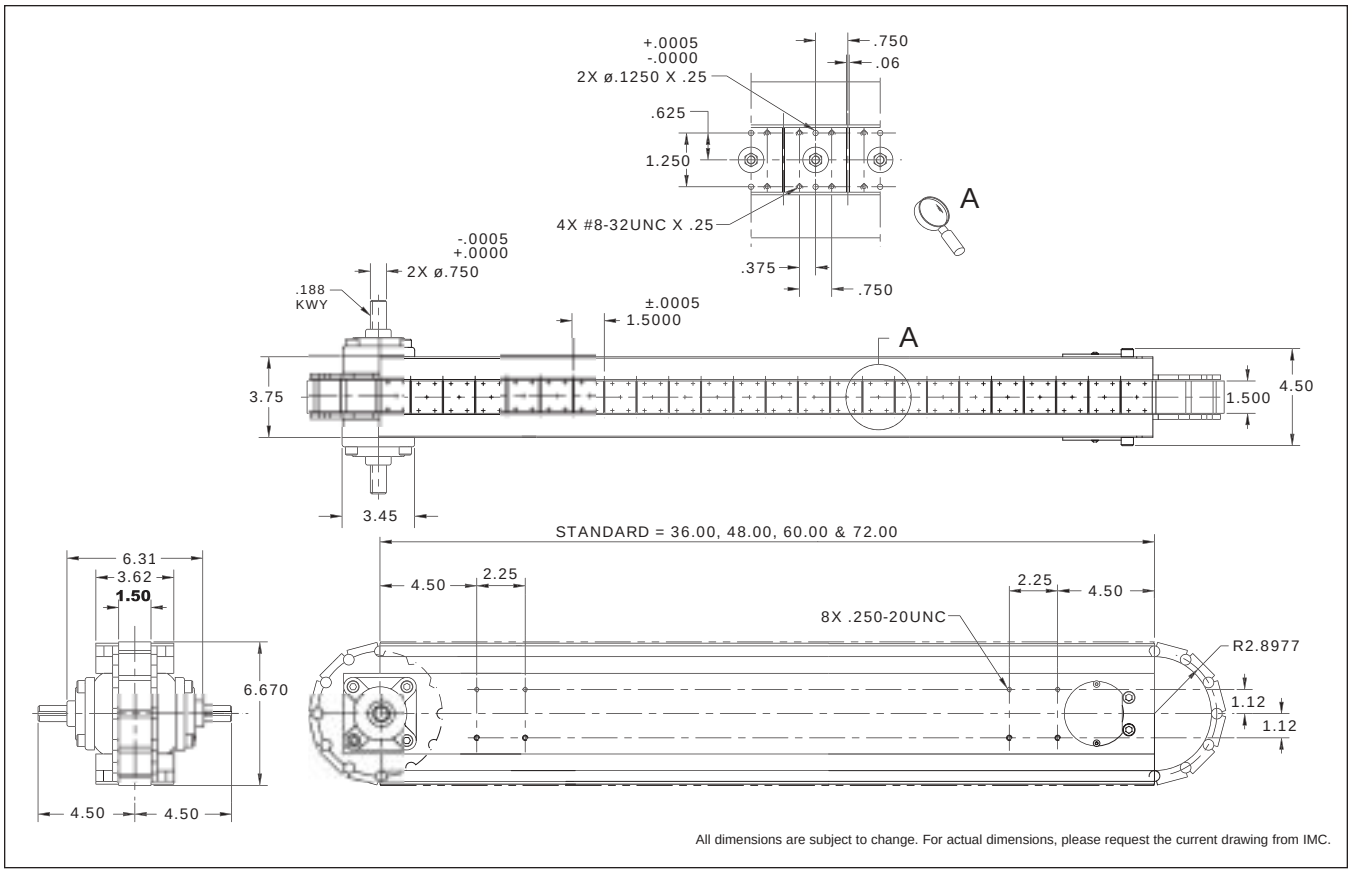

Standard Drive Package (Over/Under & Carousel)

- 400RA Index Drive
- 2.3FC-SD Overload Clutch
- R180 Gear Reducer
- 1/3 hp DC Motor
- Varipak DC Motor Control

Heavy Duty Drive Package (Over/Under)

- 250P Index Drive
- .39FC-SD Overload Clutch
- R180 Gear Reducer
- 1/3 hp DC Motor
- Varipak DC Motor Control

Index Distance (in.)	Indexer Stops
1.5	12
3	6
4.5	4
6	3
9	2

1.5 Carousel

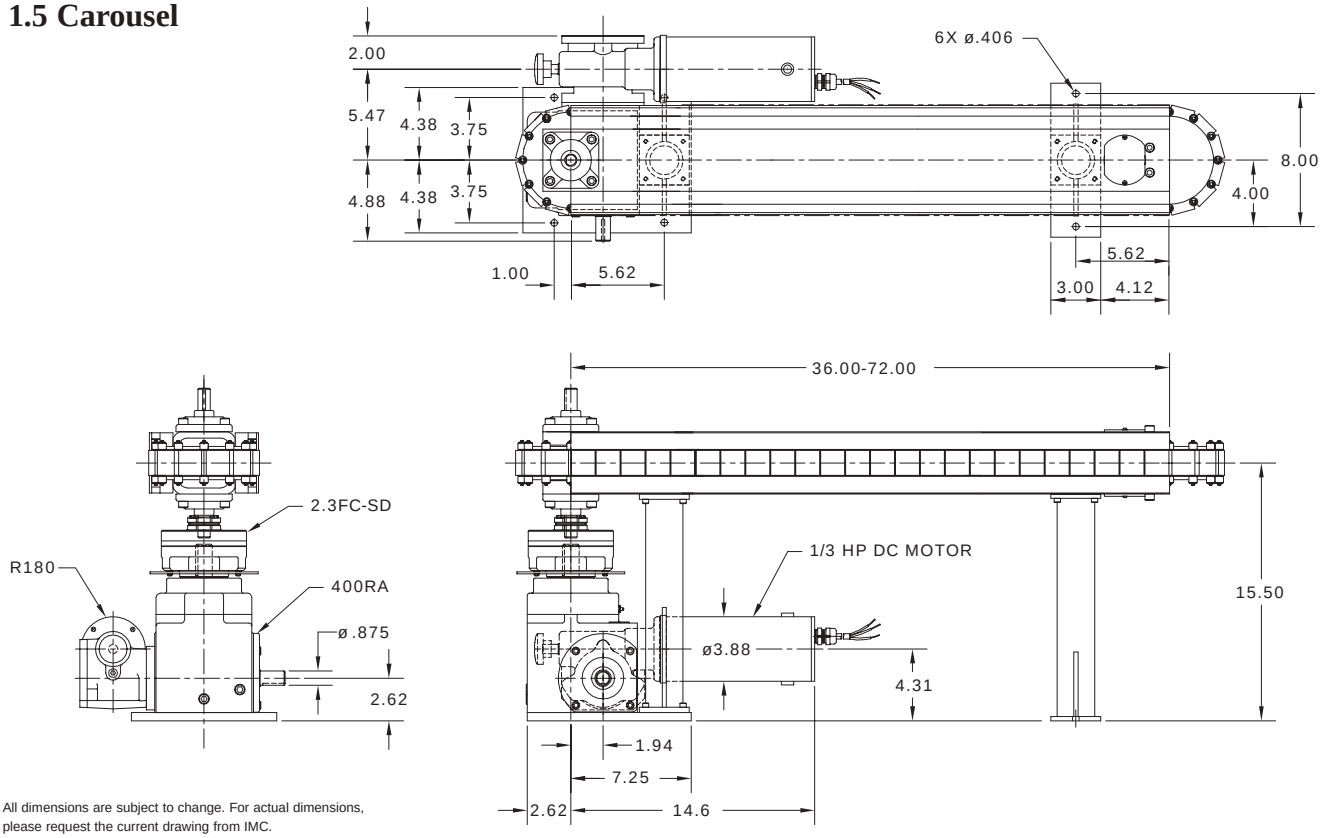

All dimensions are subject to change. For actual dimensions, please request the current drawing from IMC.

J

1.5 Over/Under

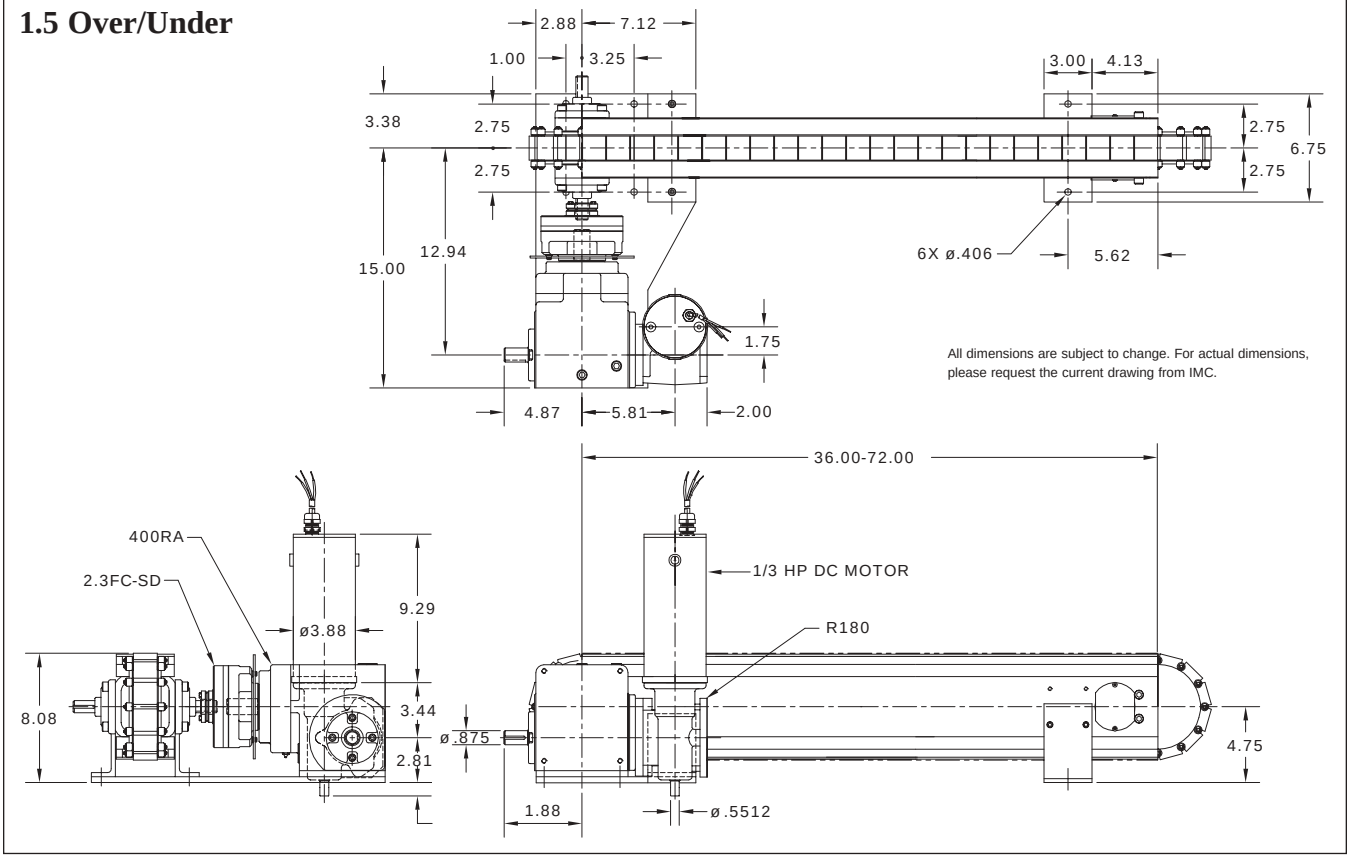

All dimensions are subject to change. For actual dimensions, please request the current drawing from IMC.

2.0 Basic Module

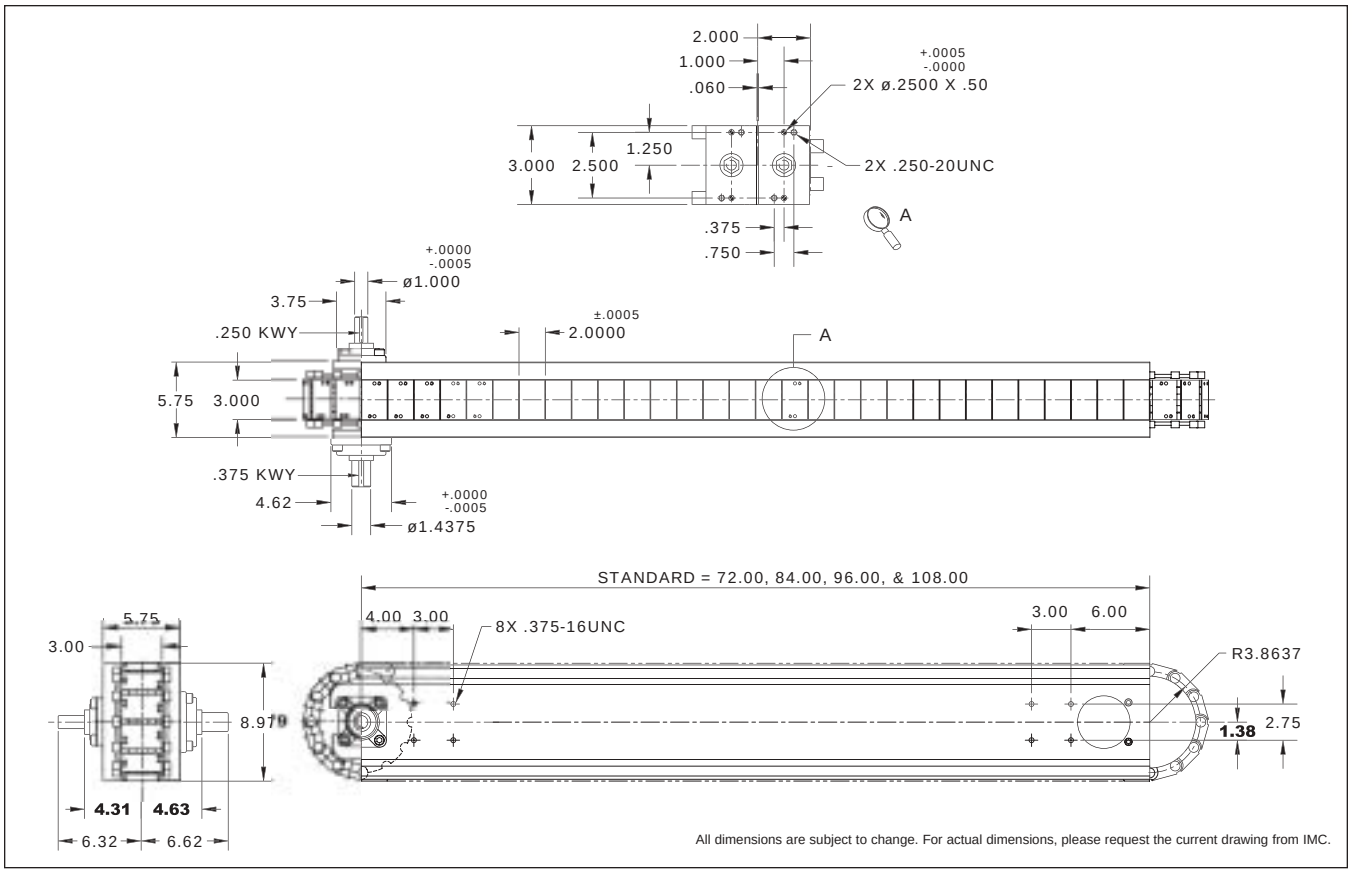

J

Standard Drive Package (Over/Under & Carousel)

- 401RA Index Drive
- 2.3FC-SD Overload Clutch
- R225 Gear Reducer
- 1 hp DC Motor
- Varipak DC Motor Control

Heavy Duty Drive Package (Over/Under & Carousel)

- 512RA Index Drive
- 6.0FC-SD Overload Clutch
- R260 Gear Reducer
- 1 hp DC Motor
- Varipak DC Motor Control

Standard Drive Package (Over/Under)

- 387P Index Drive
- 2.3FC-SD Overload Clutch
- R260 Gear Reducer
- 1 hp DC Motor
- Varipak DC Motor Control

Heavy Duty Drive Package (Over/Under)

- 512P Index Drive
- 6.0FC-SD Overload Clutch
- R260 Gear Reducer
- 1 hp DC Motor
- Varipak DC Motor Control

Index Distance (in.)	Indexer Stops
2	12
4	6
6	4
8	3

2.0 Carousel

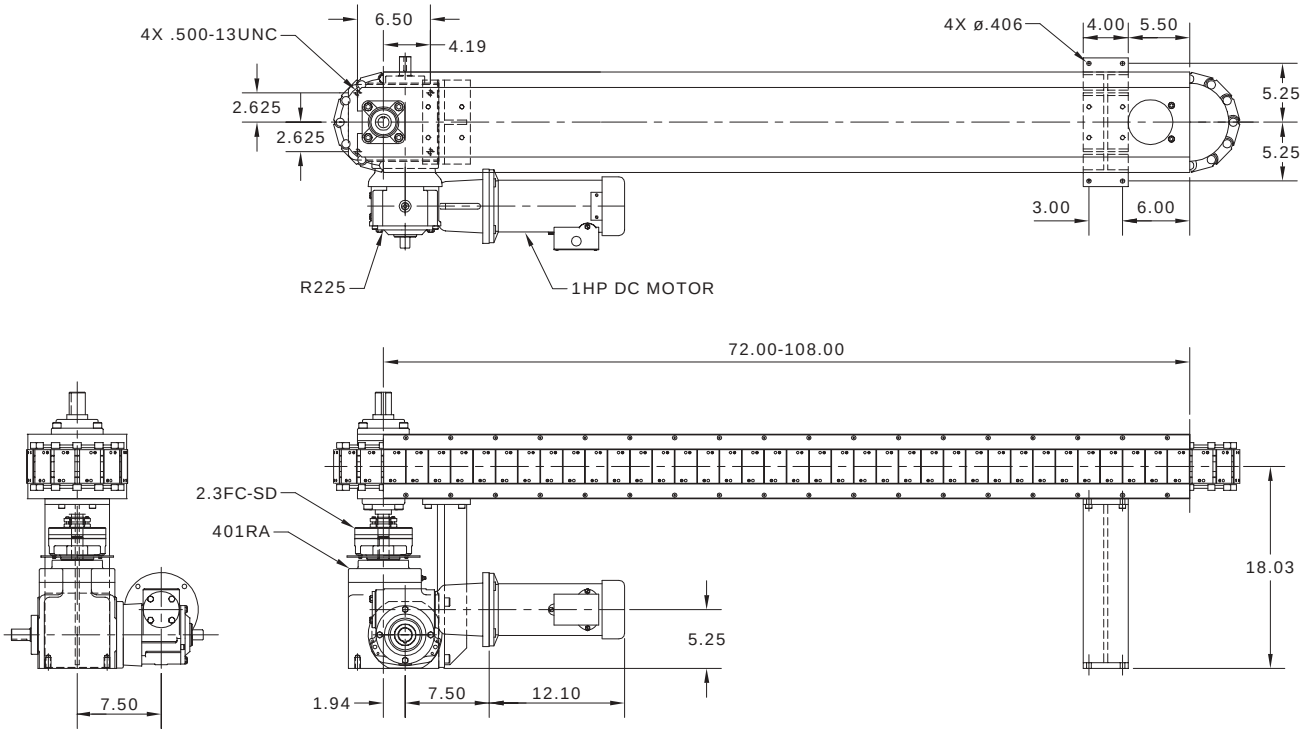

All dimensions are subject to change. For actual dimensions, please request the current drawing from IMC.

2.0 Over/Under

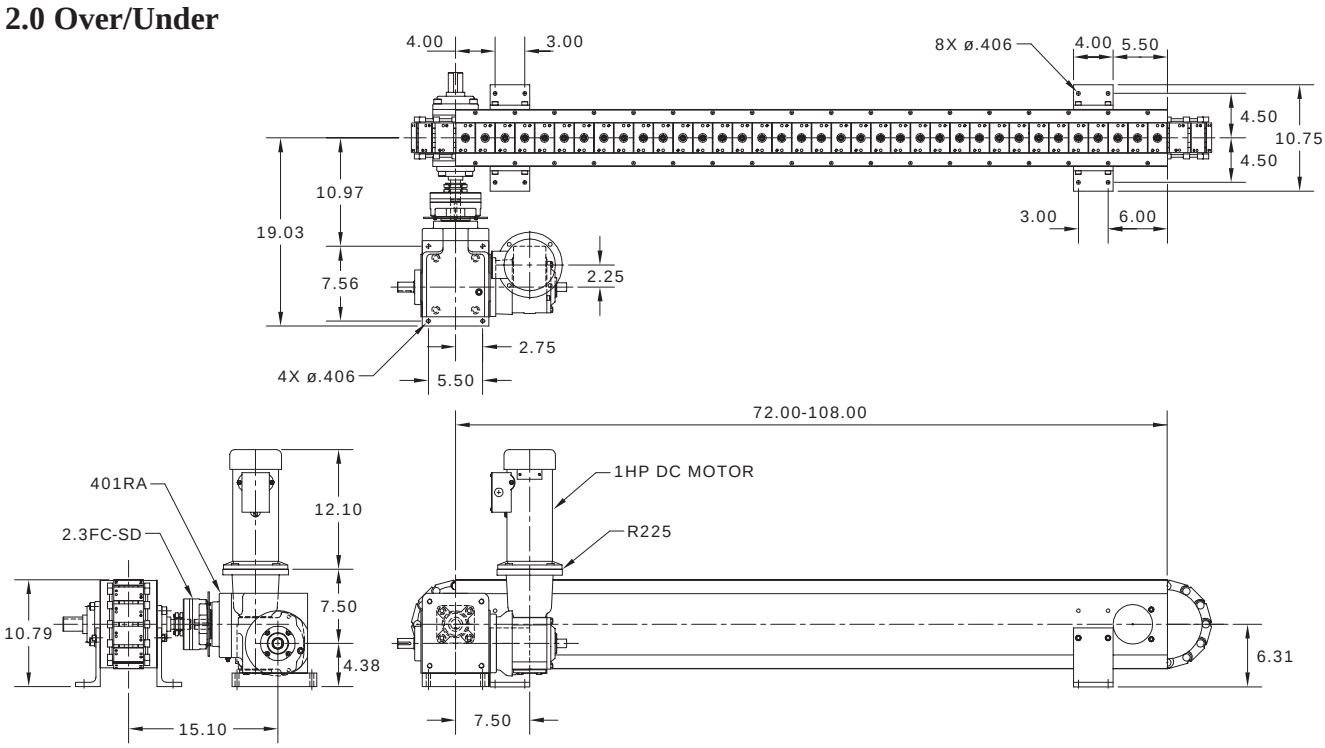

All dimensions are subject to change. For actual dimensions, please request the current drawing from IMC.

J

3.0 Basic Module

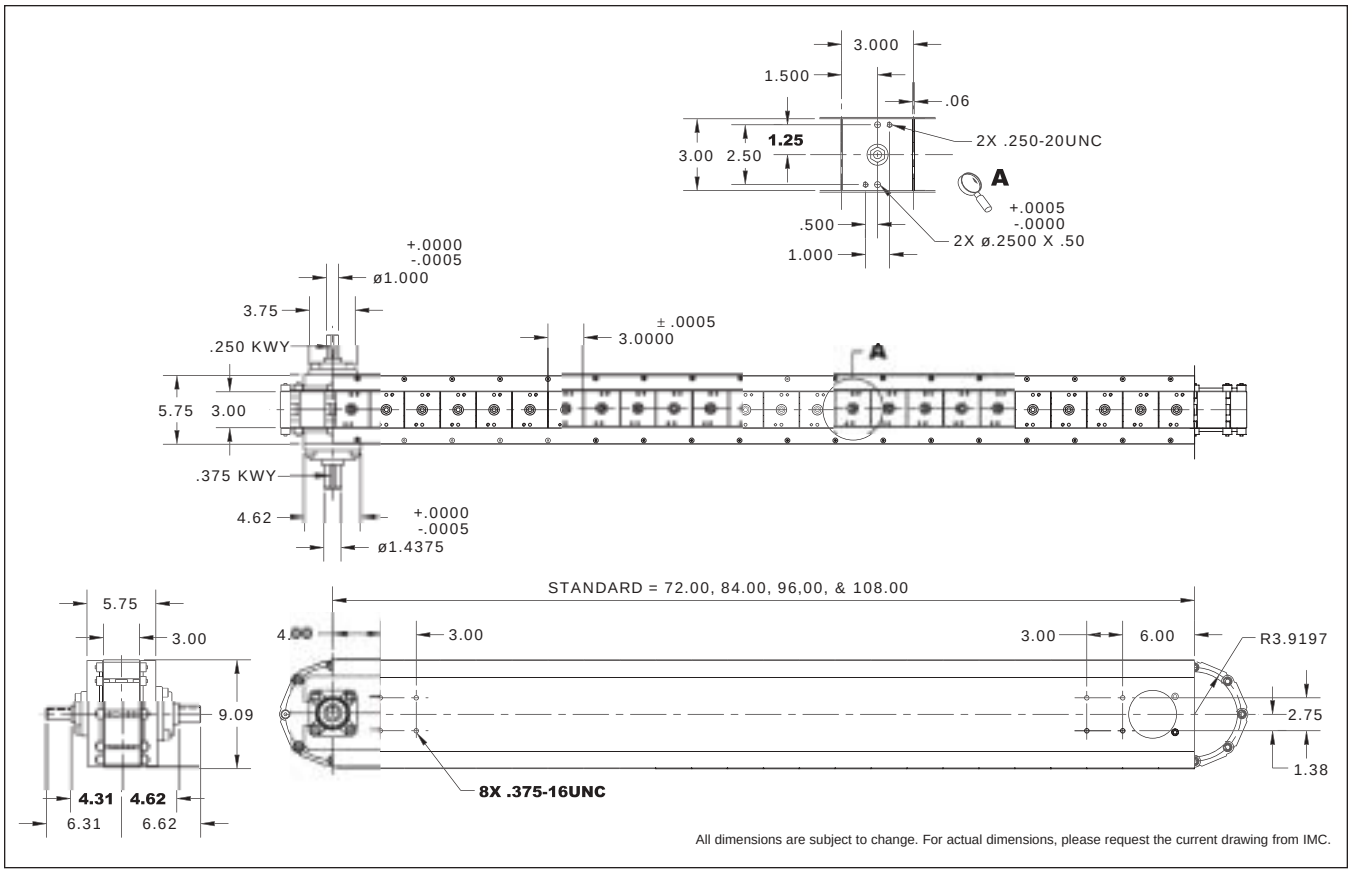

Standard Drive Package (Over/Under & Carousel)

- 401RA Index Drive
- 2.3FC-SD Overload Clutch
- R225 Gear Reducer
- 1 hp DC Motor
- Varipak DC Motor Control

Heavy Duty Drive Package (Over/Under & Carousel)

- 512RA Index Drive
- 6.0FC-SD Overload Clutch
- R260 Gear Reducer
- 1 hp DC Motor
- Varipak DC Motor Control

Standard Drive Package (Over/Under)

- 387P Index Drive
- 2.3FC-SD Overload Clutch
- R260 Gear Reducer
- 1 hp DC Motor
- Varipak DC Motor Control

Heavy Duty Drive Package (Over/Under)

- 512P Index Drive
- 6.0FC-SD Overload Clutch
- R260 Gear Reducer
- 1 hp DC Motor
- Varipak DC Motor Control

Index Distance (in.)	Indexer Stops
3	8
6	4
9	2 2/3*
12	2

* Not available in Parallel Indexers.

3.0 Carousel

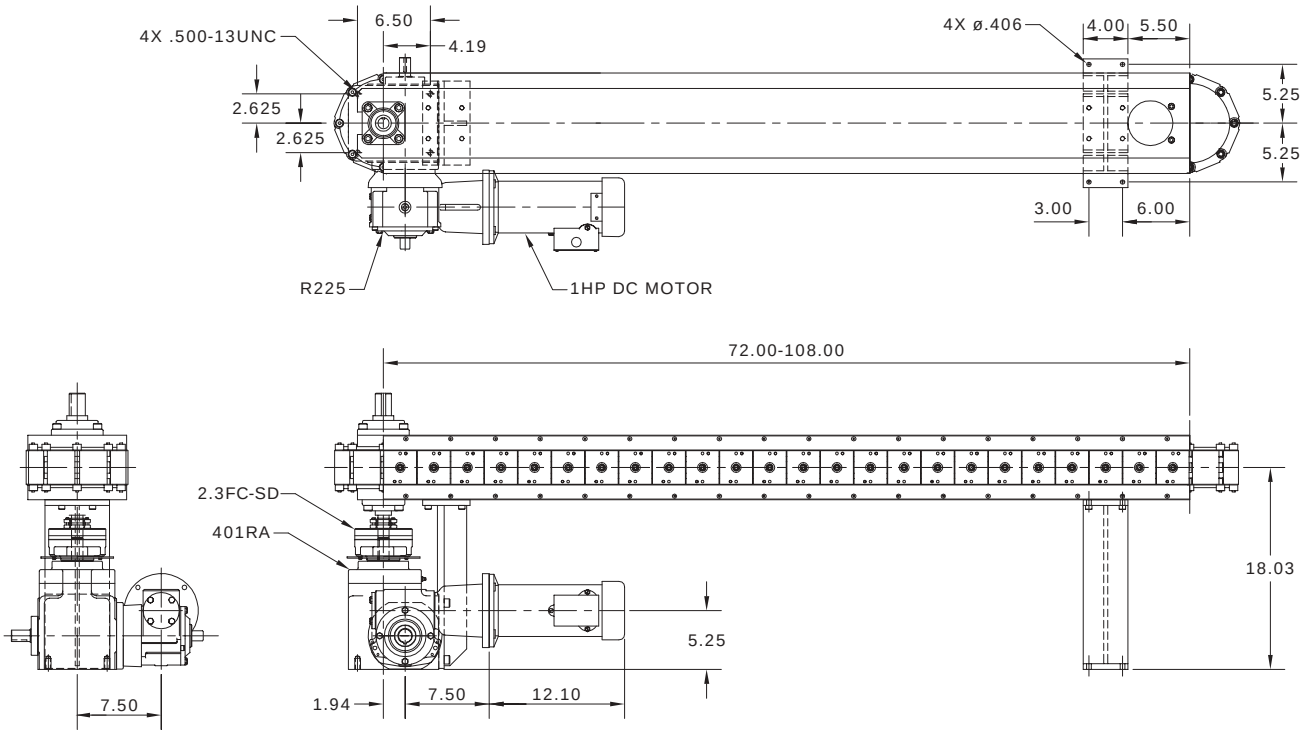

All dimensions are subject to change. For actual dimensions, please request the current drawing from IMC.

3.0 Over/Under

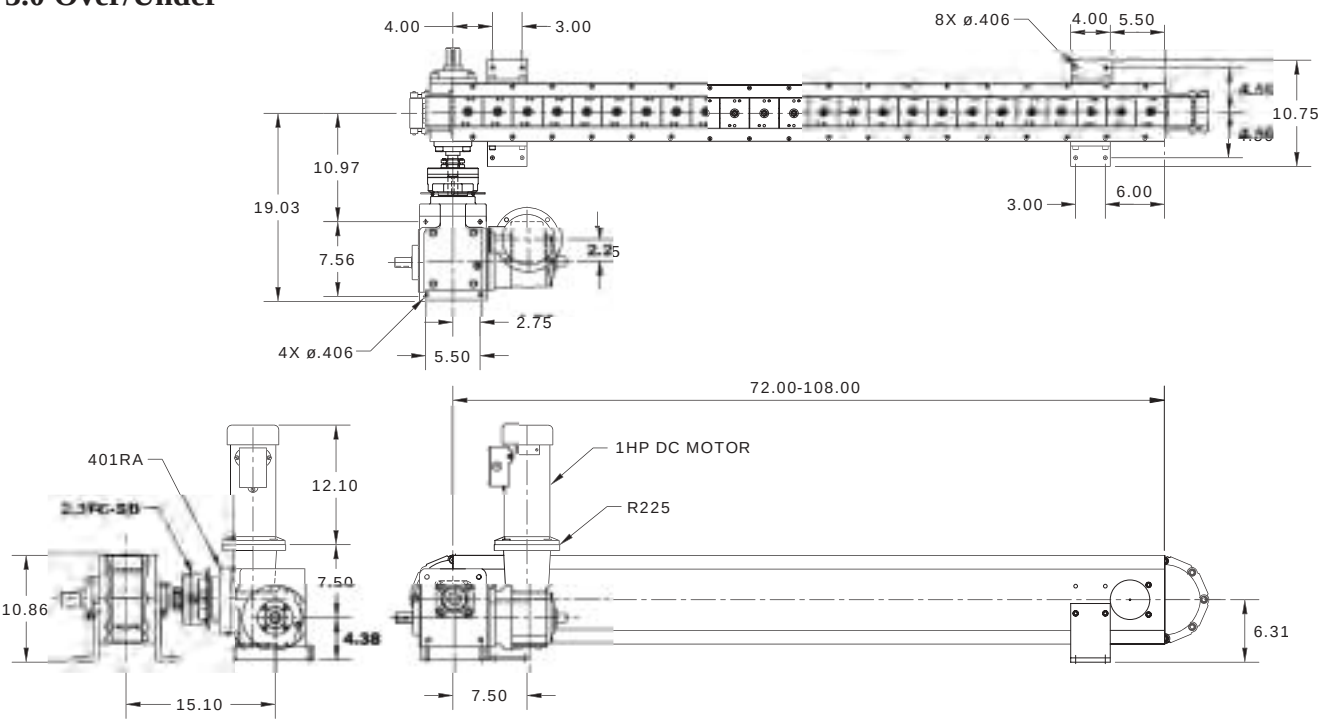

All dimensions are subject to change. For actual dimensions, please request the current drawing from IMC.

J

4.5 Basic Module

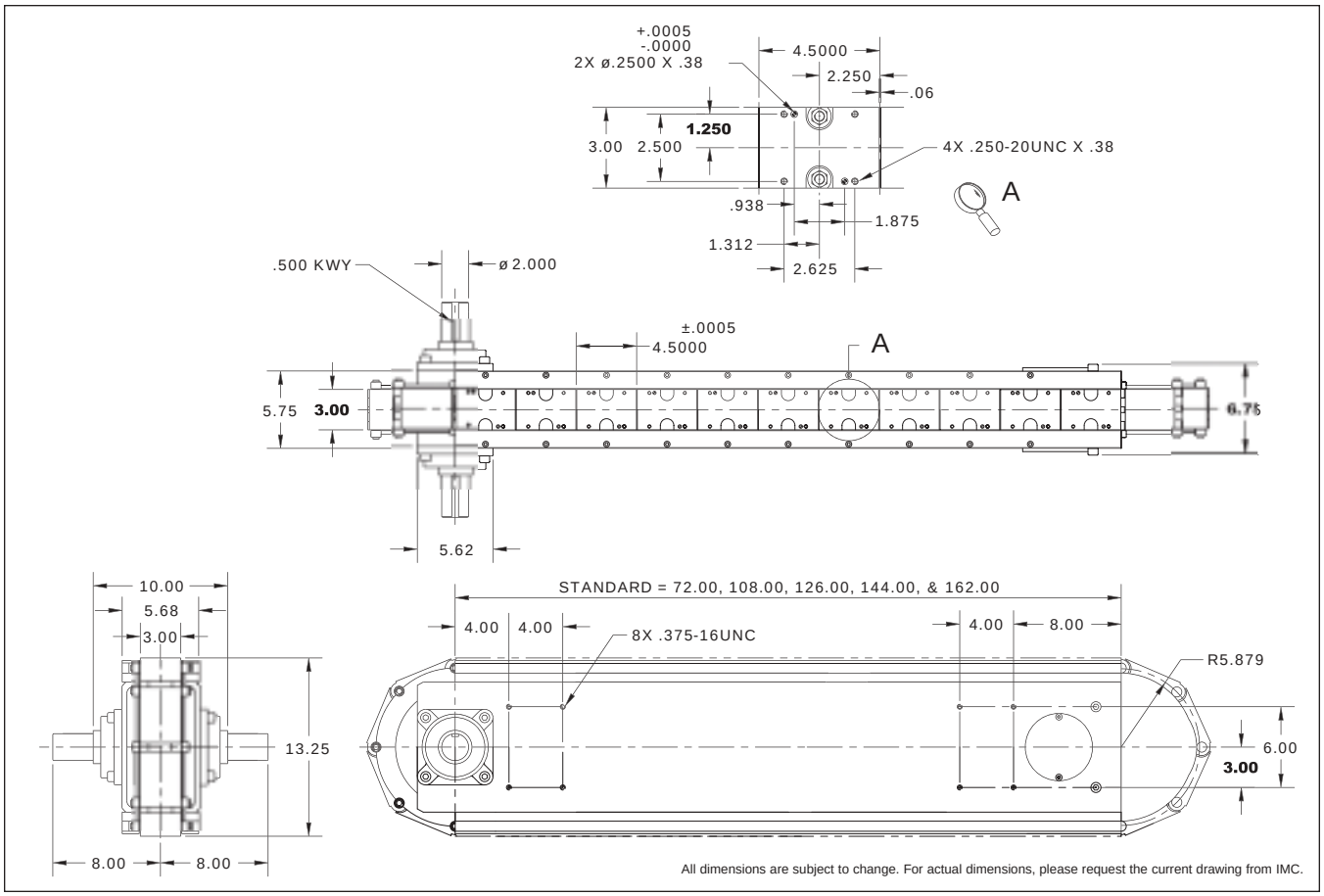

Standard Drive Package (Over/Under)

- 662RA Index Drive
- 11FC-SD Overload Clutch
- 7300C Gear Reducer
- 1 hp DC Motor
- Varipak DC Motor Control

Standard Drive Package (Carousel)

- 500RGD Index Drive
- 11FC-SD Overload Clutch
- 7300C Gear Reducer
- 1 hp DC Motor
- Varipak DC Motor Control

Index Distance (in.)	Indexer Stops
4.5	8
9	4
18	2

4.5 Carousel

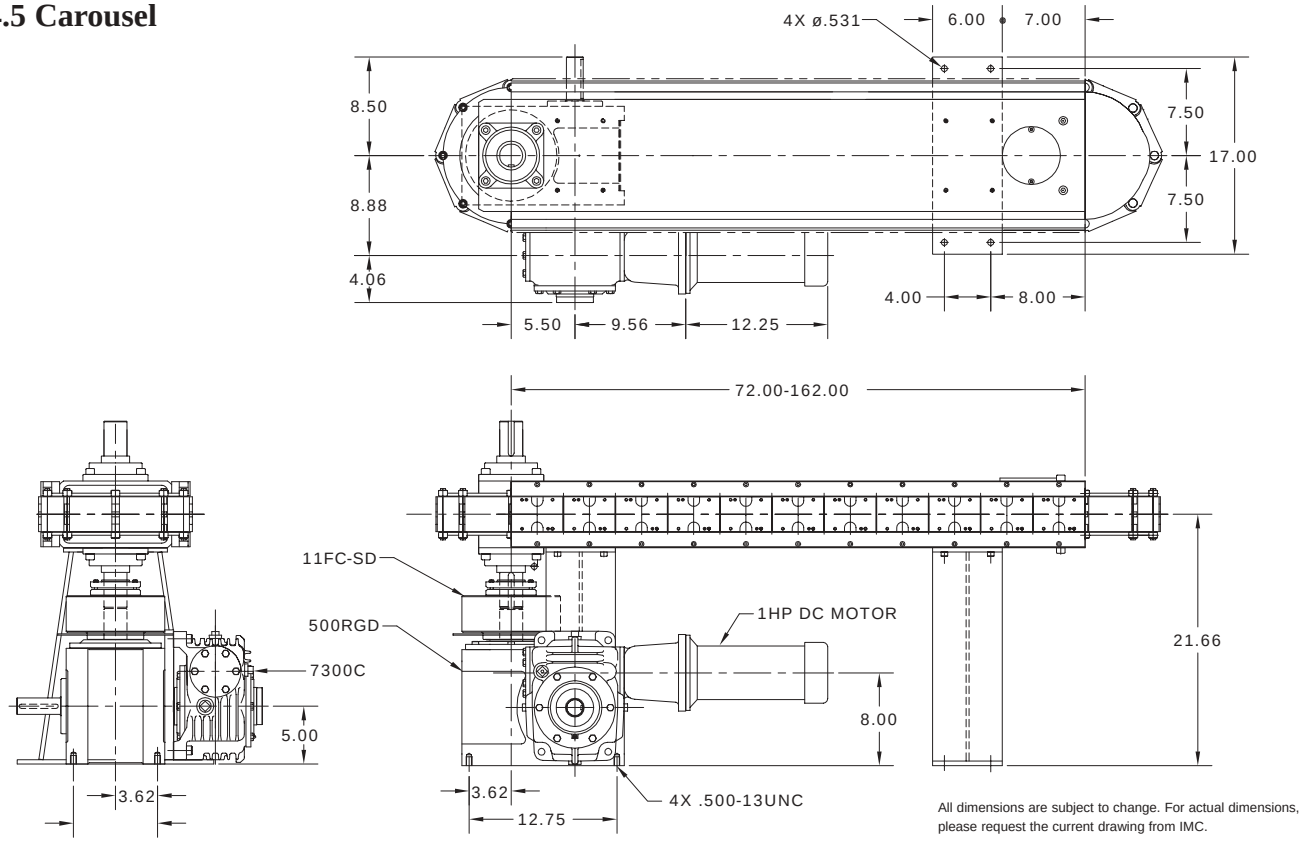

All dimensions are subject to change. For actual dimensions, please request the current drawing from IMC.

4.5 Over/Under

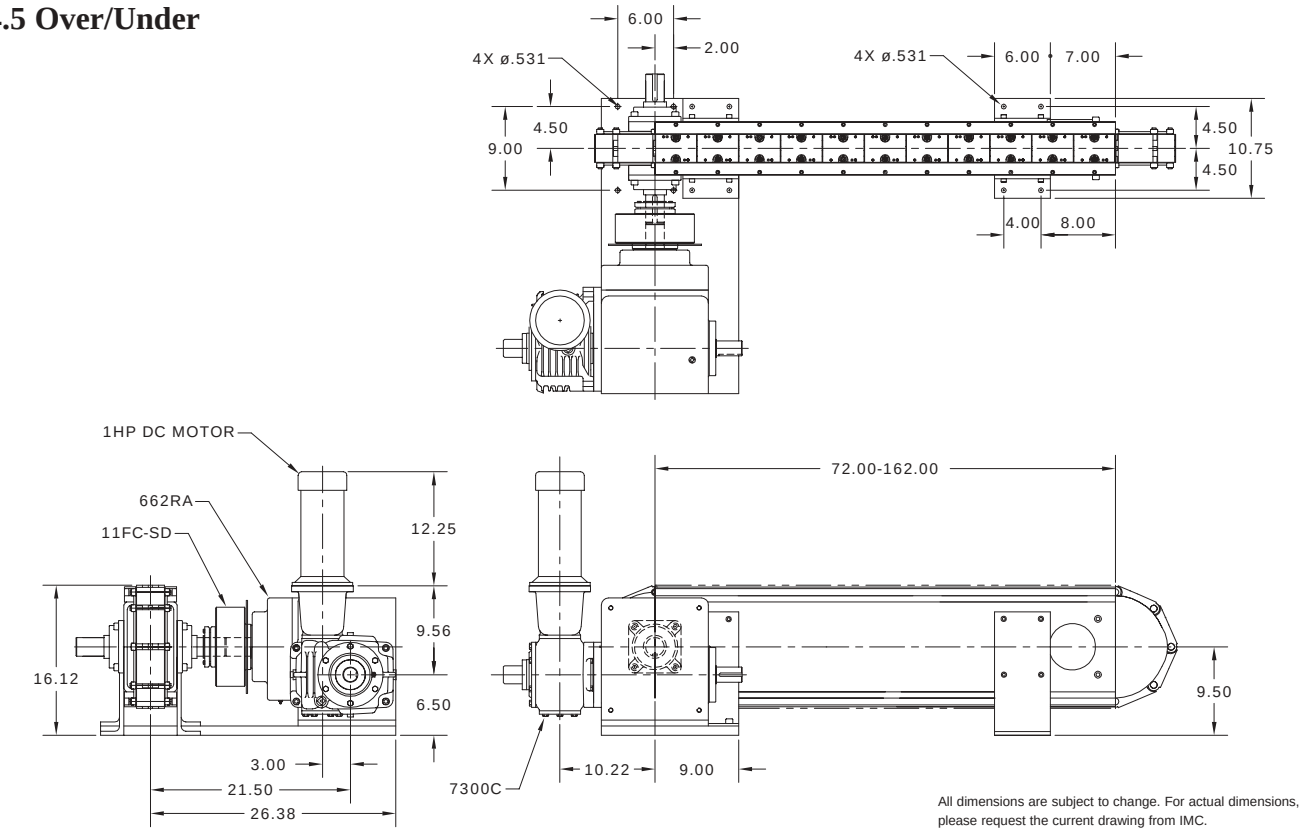

All dimensions are subject to change. For actual dimensions, please request the current drawing from IMC.

J

6.0 Basic Module

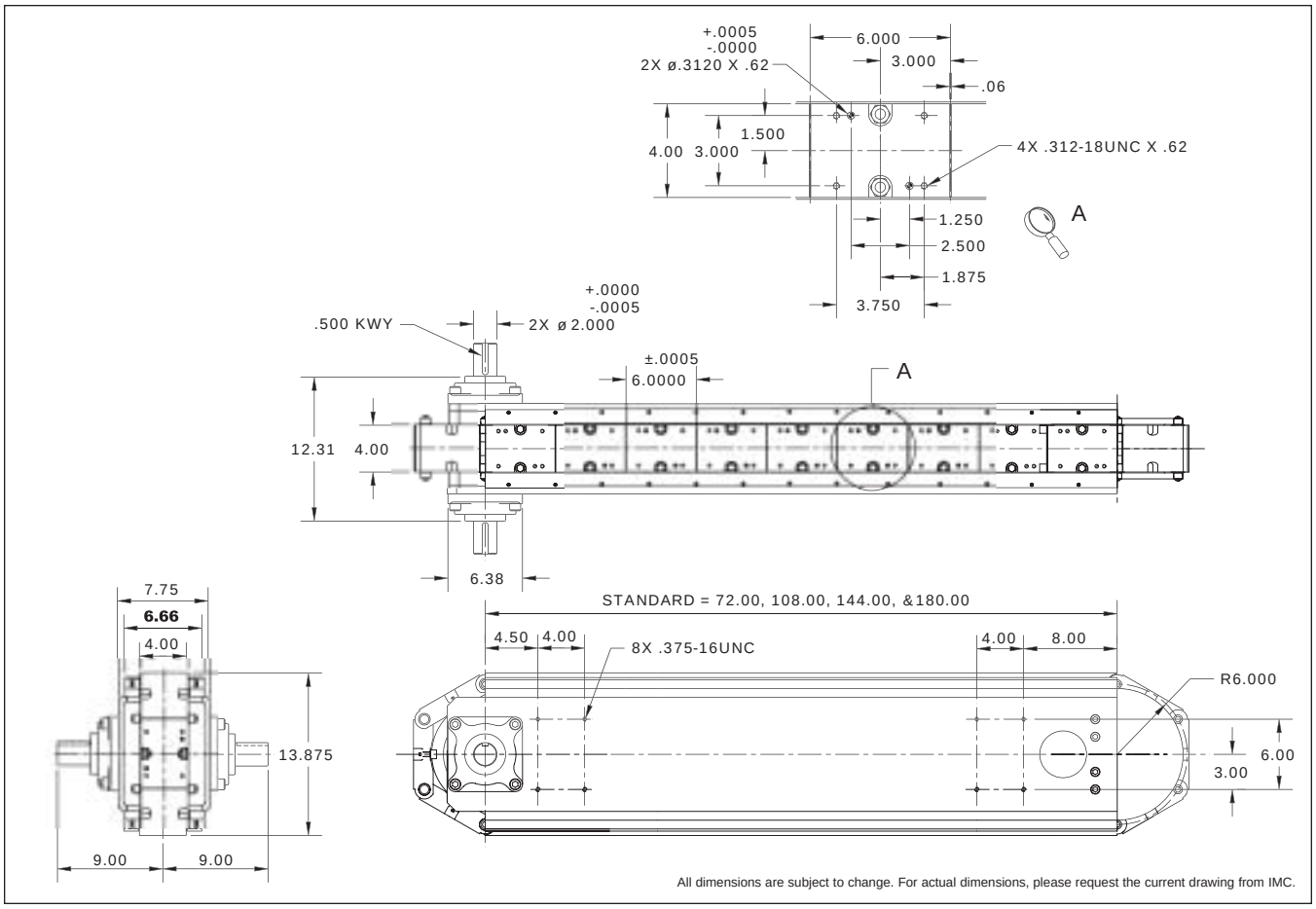

Standard Drive Package (Over/Under & Carousel)

- 662RA Index Drive
- 11FC-SD Overload Clutch
- 7300C Gear Reducer
- 1 hp DC Motor
- Varipak DC Motor Control

Heavy Duty Drive Package (Over/Under & Carousel)

- 800RD Index Drive
- 25FC-SD Overload Clutch
- 7300C Gear Reducer
- 1 hp DC Motor
- Varipak DC Motor Control

Standard Drive Package (Over/Under)

- 662RA Index Drive
- 11FC-SD Overload Clutch
- 7300C Gear Reducer
- 1 hp DC Motor
- Varipak DC Motor Control

Index Distance (in.)	Indexer Stops
6	6
12	3
18	2

6.0 Carousel

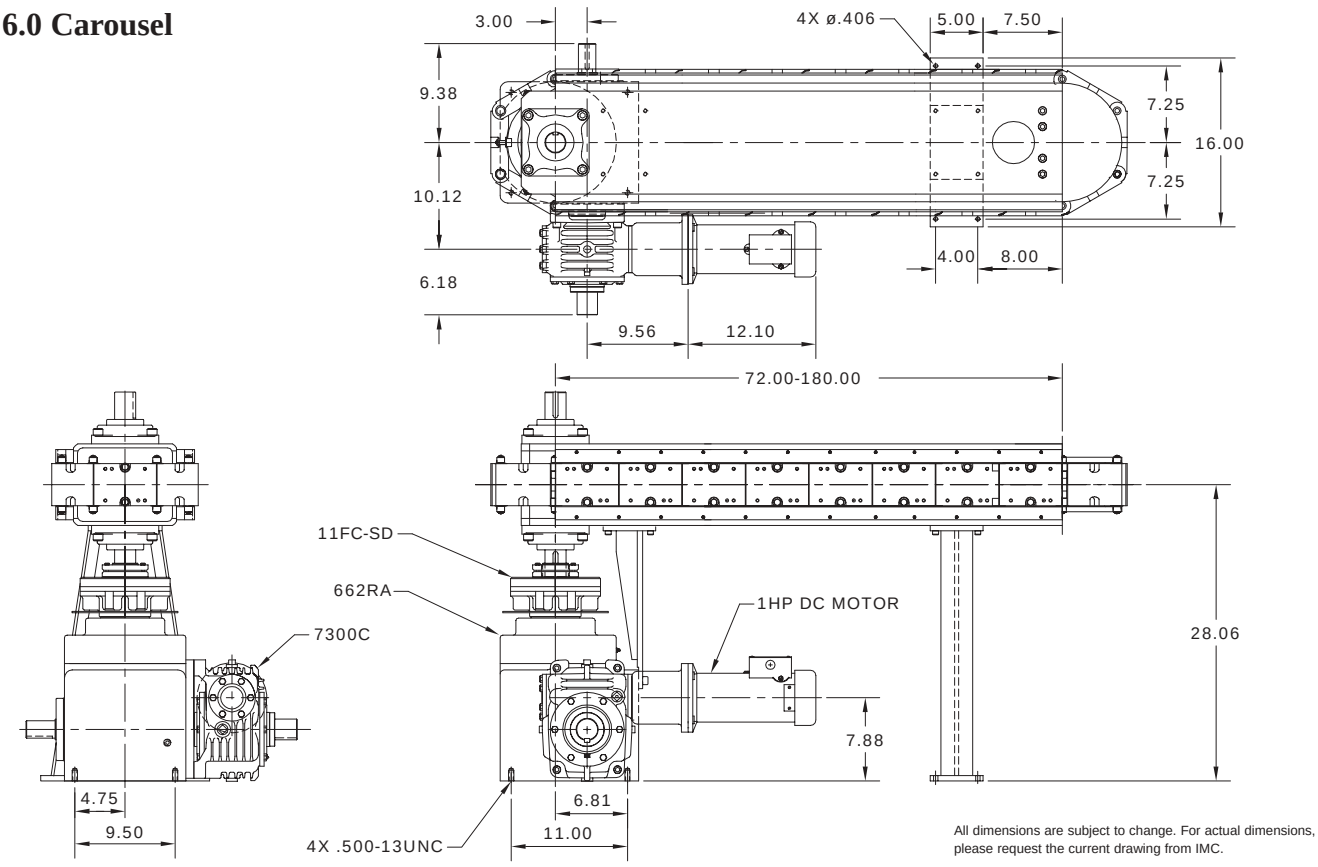

All dimensions are subject to change. For actual dimensions, please request the current drawing from IMC.

6.0 Over/Under

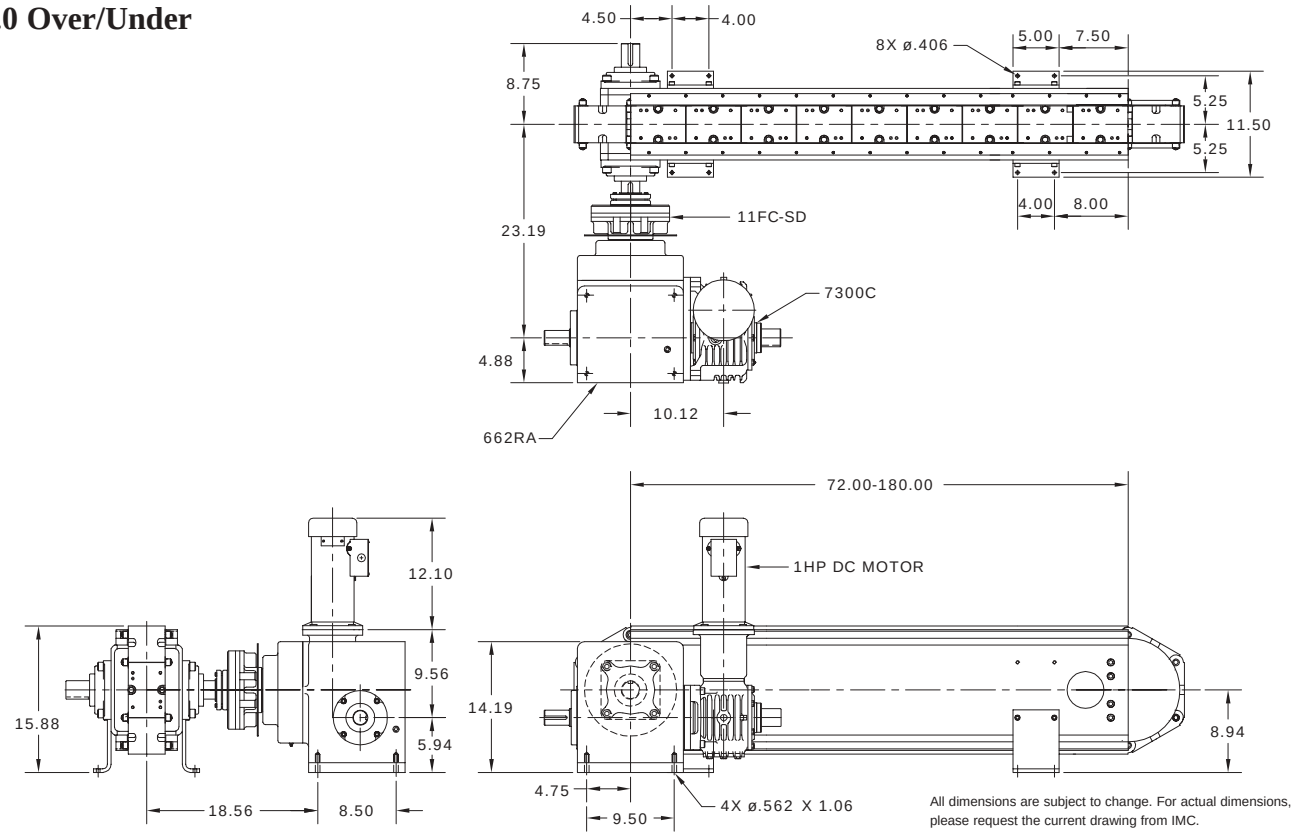

All dimensions are subject to change. For actual dimensions, please request the current drawing from IMC.

J

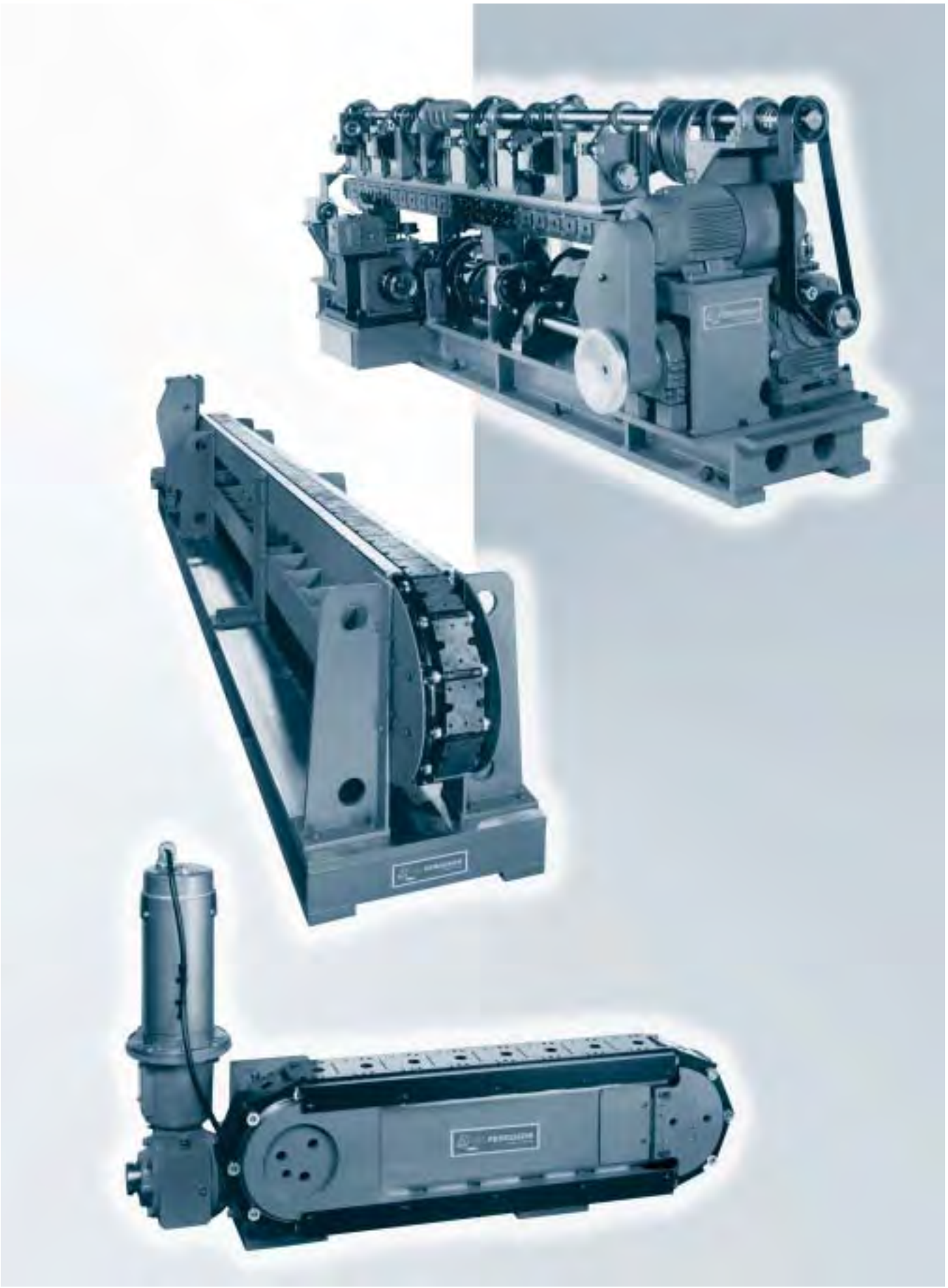

Heavy Duty Precision Link Conveyors

IMC Heavy Duty Precision Link Conveyors are available with standard link lengths of 6.0", 9.0" and 12". They are available in Over/Under and Carousel configurations. Both configurations include heavy-duty legs and a precision machined base designed to hold large loads and maintain system accuracy. Adjustable soft machine mounts are available on the base to accommodate inconsistent on-site flooring.

The conveyor is available with either an “open backbone” or “closed backbone” design. The open backbone allows for convenient passage of tooling, drive shafts, timing belts, and hydraulic, air or electrical lines through the center of the conveyor. The closed backbone design is ideally suited to mounted IMC parts handlers and tooling plates and offers increased rigidity.

Like the Table Top Series, Heavy Duty Conveyors can be mounted in any direction simply by modifying the supports with no change in accuracy, load capacity or maintenance requirements.

The Heavy Duty Conveyor configurations shown here are intended as a general guideline in the design of your automation system. Your IMC Sales Agent will help you determine any options or customer modification you may require.

6.0HD LINK

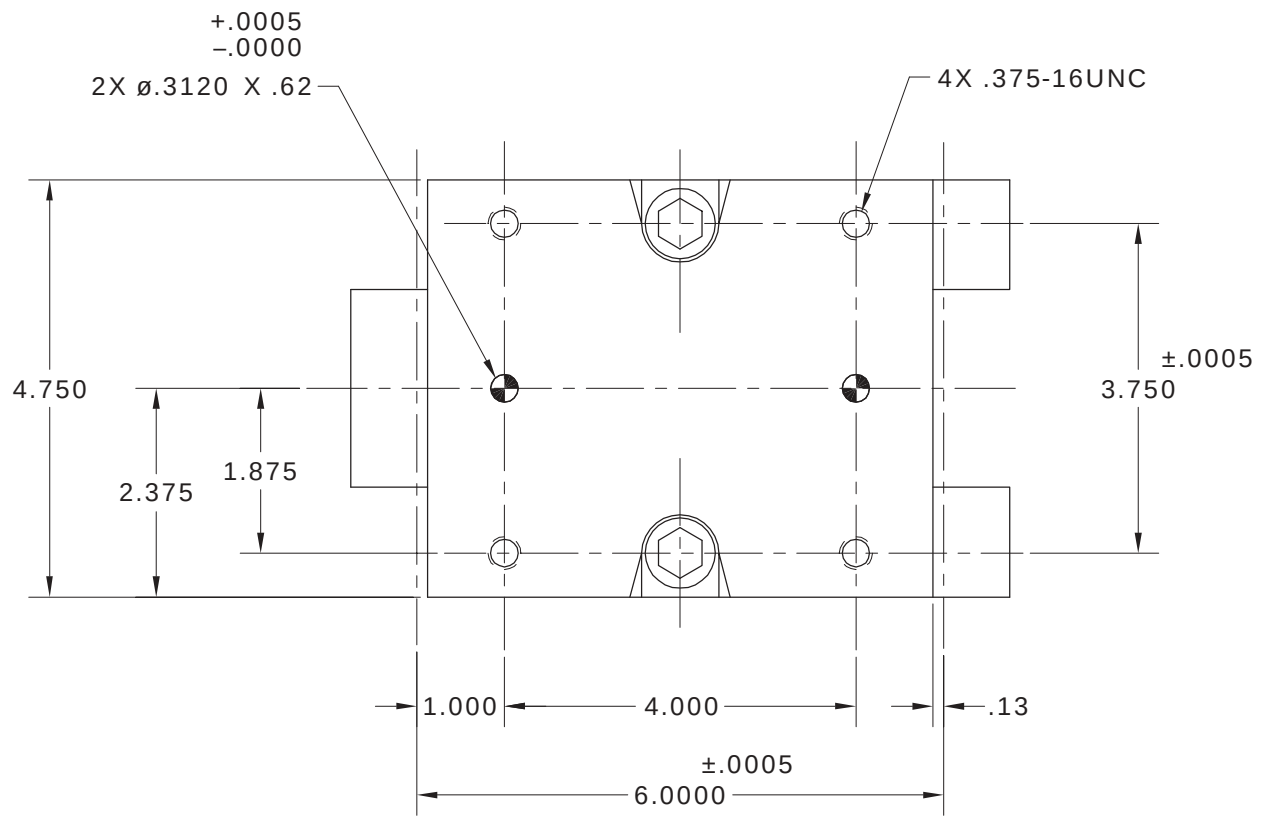

All dimensions are subject to change. For actual dimensions, please request the current drawing from IMC.

Standard Drive Package

- 242 Intermittor Index Drive
- R400 Reducer
- 5 hp AC Motor
- MDB-1125 Air Clutch-Brake
- Cycle Cam & Limit Switch

Index Distance (in.)	Indexer Stops
6	12
12	6
18	4
24	3

6.0 HD Carousel

STANDARD

A
144.00
216.00
288.00

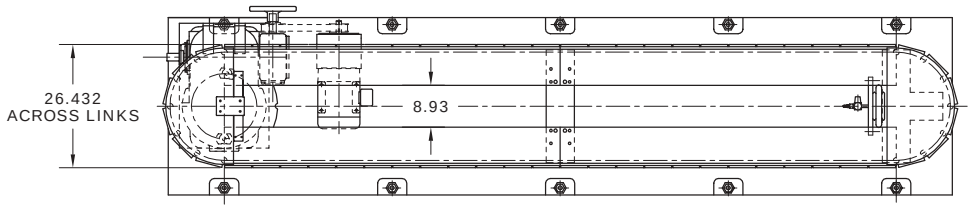

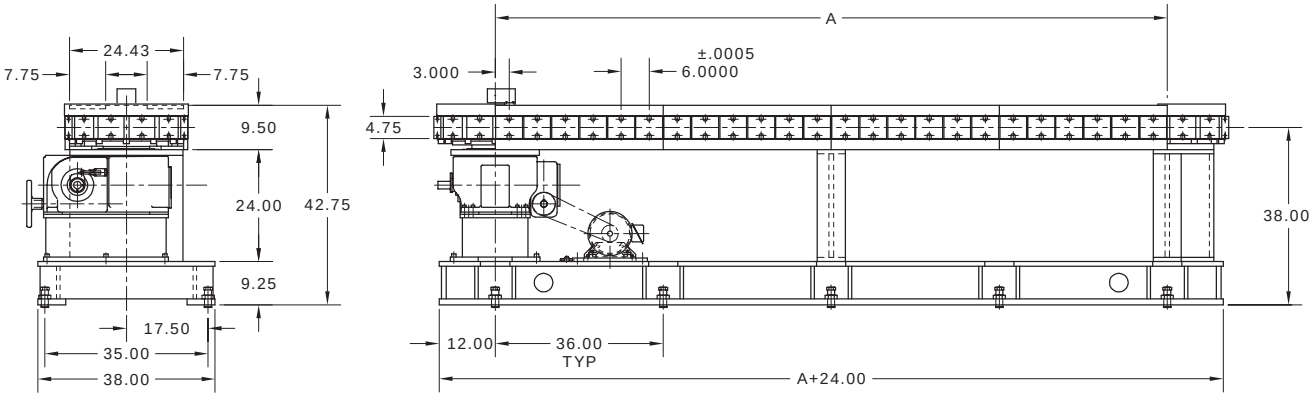

All dimensions are subject to change. For actual dimensions, please request the current drawing from IMC.

6.0HD Over/Under

STANDARD

A
144.00
216.00
288.00

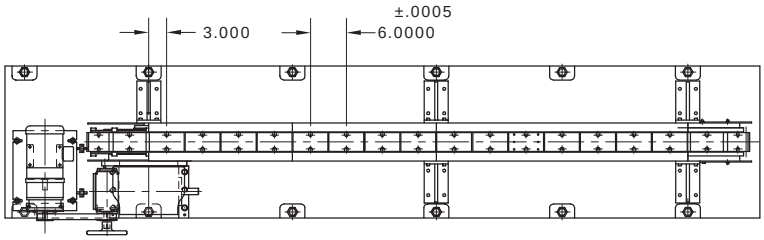

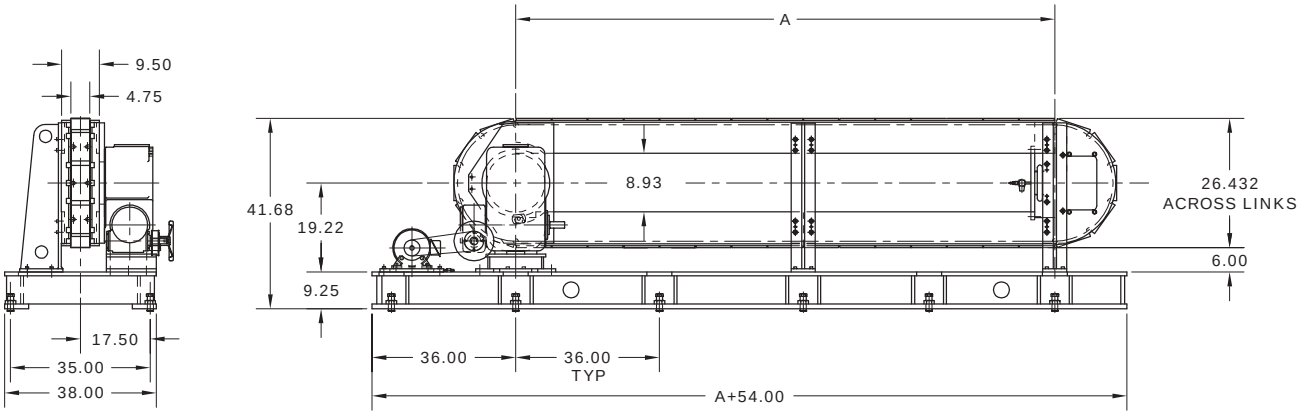

All dimensions are subject to change. For actual dimensions, please request the current drawing from IMC.

J

9.0HD LINK

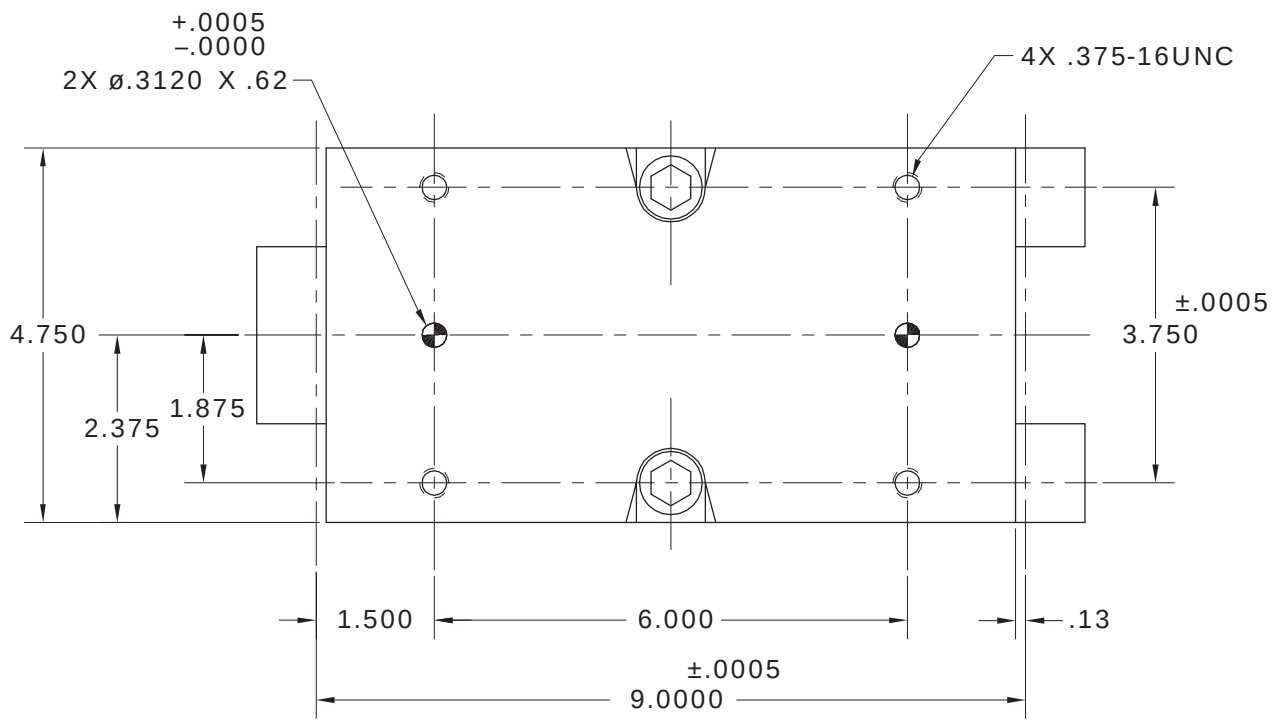

All dimensions are subject to change. For actual dimensions, please request the current drawing from IMC.

Standard Drive Package

- 242 Intermittor Index Drive
- R400 Reducer
- 5 hp AC Motor
- MDB-1125 Air Clutch-Brake
- Cycle Cam & Limit Switch

Index Distance (in.)	Indexer Stops
9	12
18	6
27	4
36	3

9.0 HD Carousel

STANDARD
A
144.00
216.00
288.00

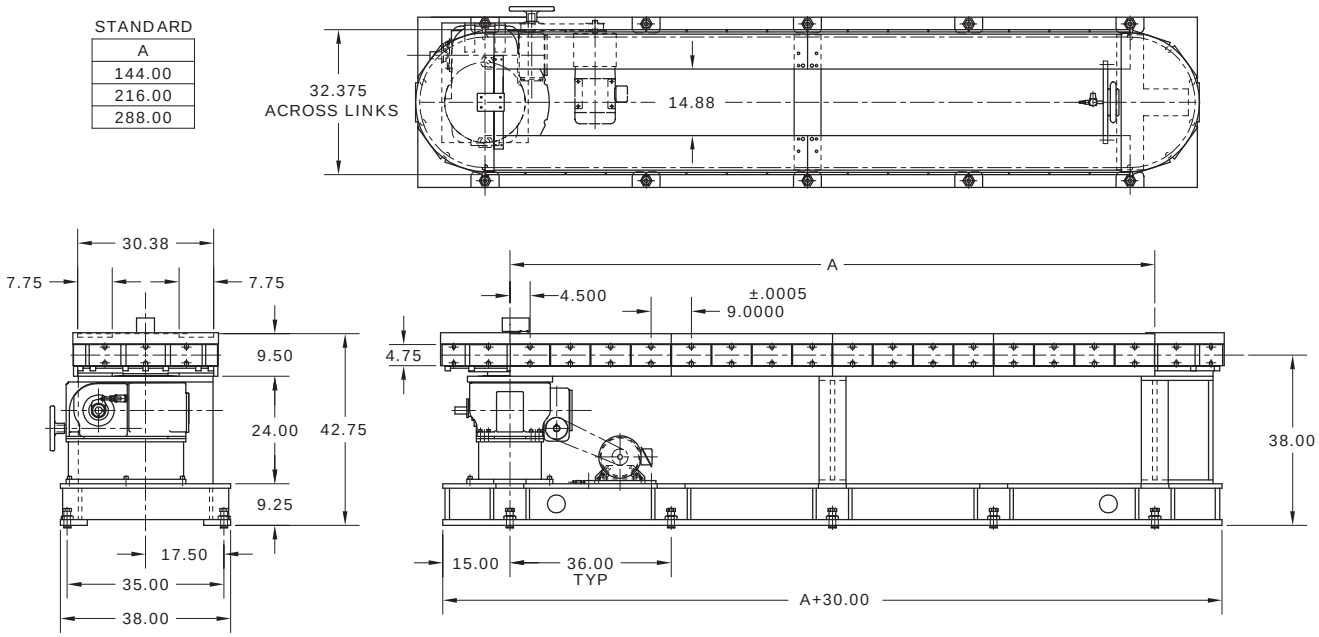

All dimensions are subject to change. For actual dimensions, please request the current drawing from IMC.

J

9.0HD Over/Under

STANDARD
A
144.00
216.00
288.00

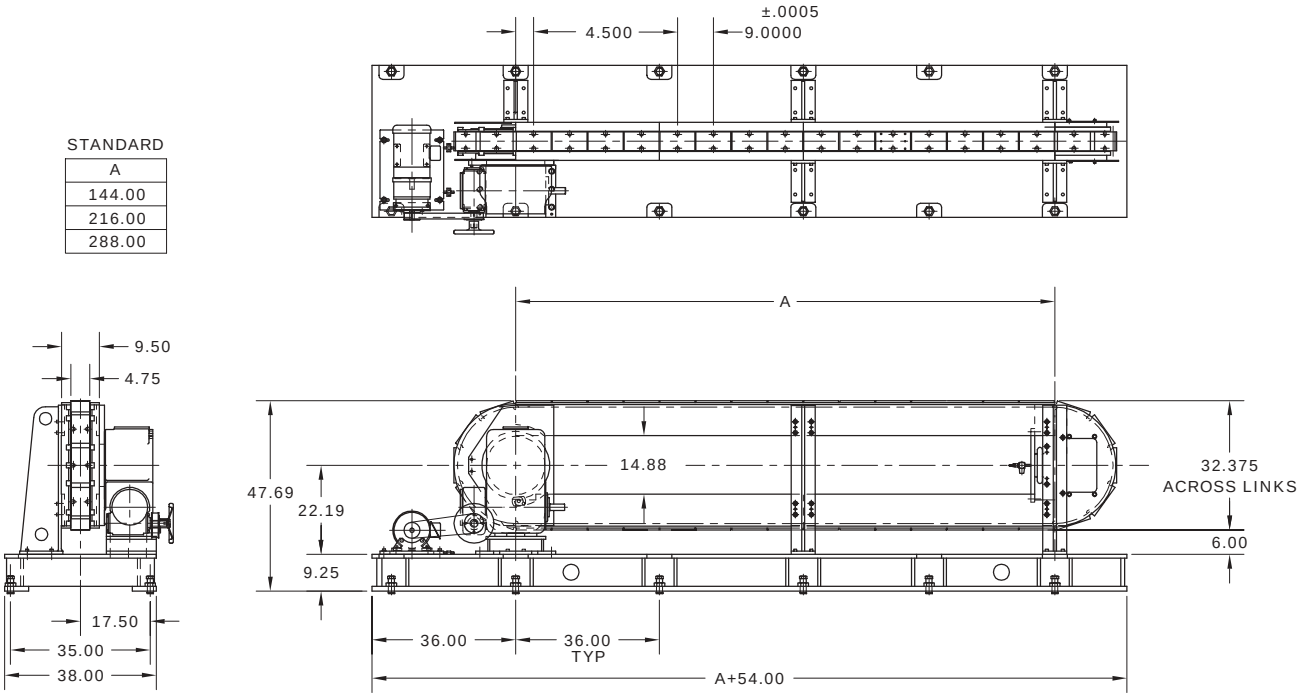

All dimensions are subject to change. For actual dimensions, please request the current drawing from IMC.

12.0HD LINK

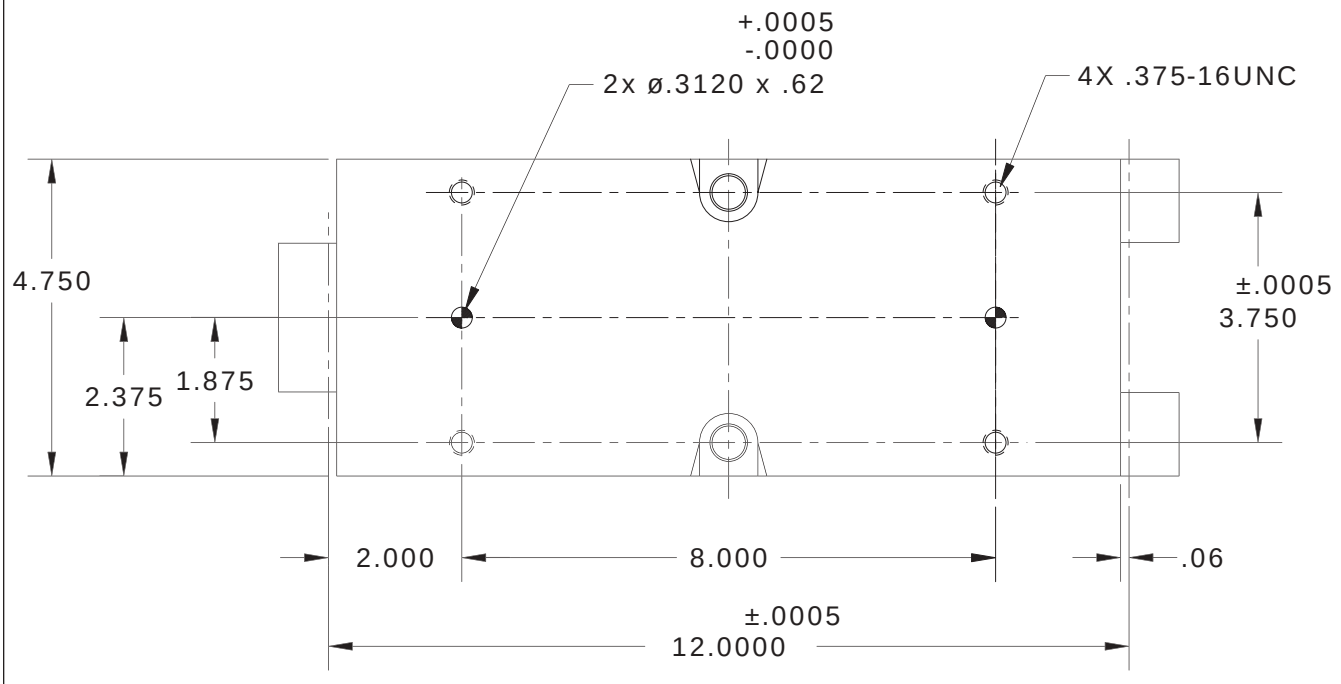

All dimensions are subject to change. For actual dimensions, please request the current drawing from IMC.

Standard Drive Package

- 242 Intermittor
- R5 Reducer
- 7.5 hp AC Motor
- Posidyne Clutch-Brake
- Brake Cam & Limit Switch

Index Distance (in.)	Indexer Stops	Sprocket
12	8, 10, 12	8T, 10T, 12T
24	4, 5, 6	8T, 10T, 12T
36	4	12T
48	2, 3	8T, 12T

12.0 HD Carousel

STANDARD
A
144.00
216.00
288.00

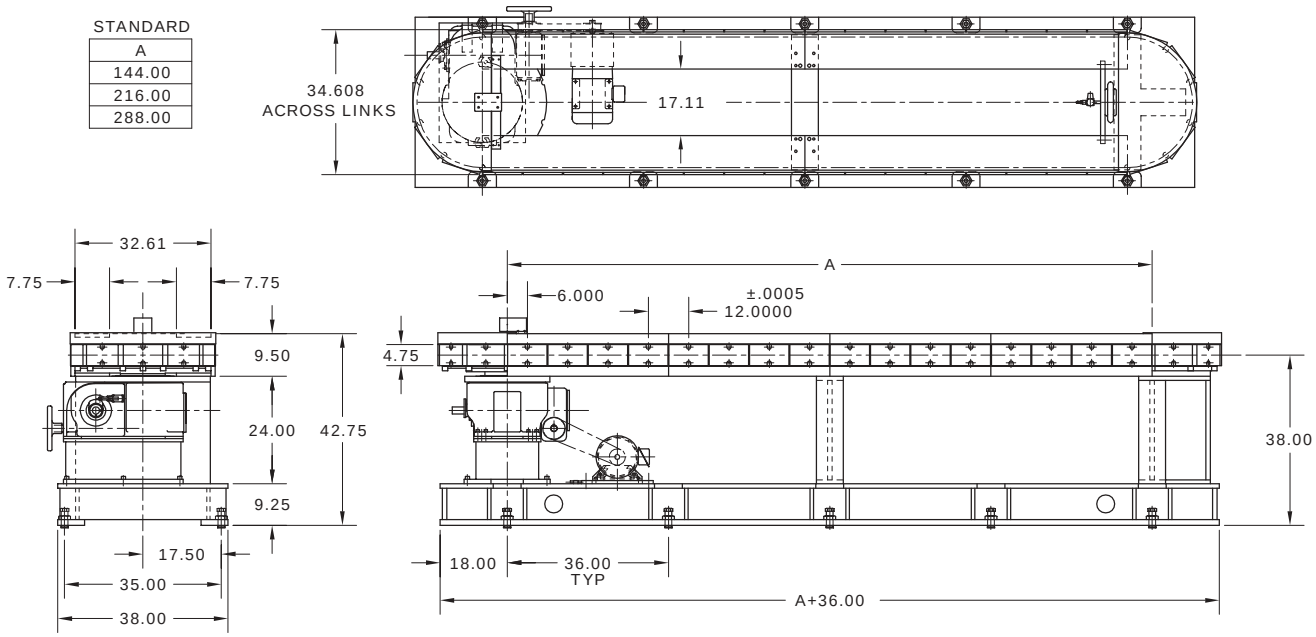

All dimensions are subject to change. For actual dimensions, please request the current drawing from IMC.

J

12.0HD Over/Under

STANDARD
A
144.00
216.00
288.00

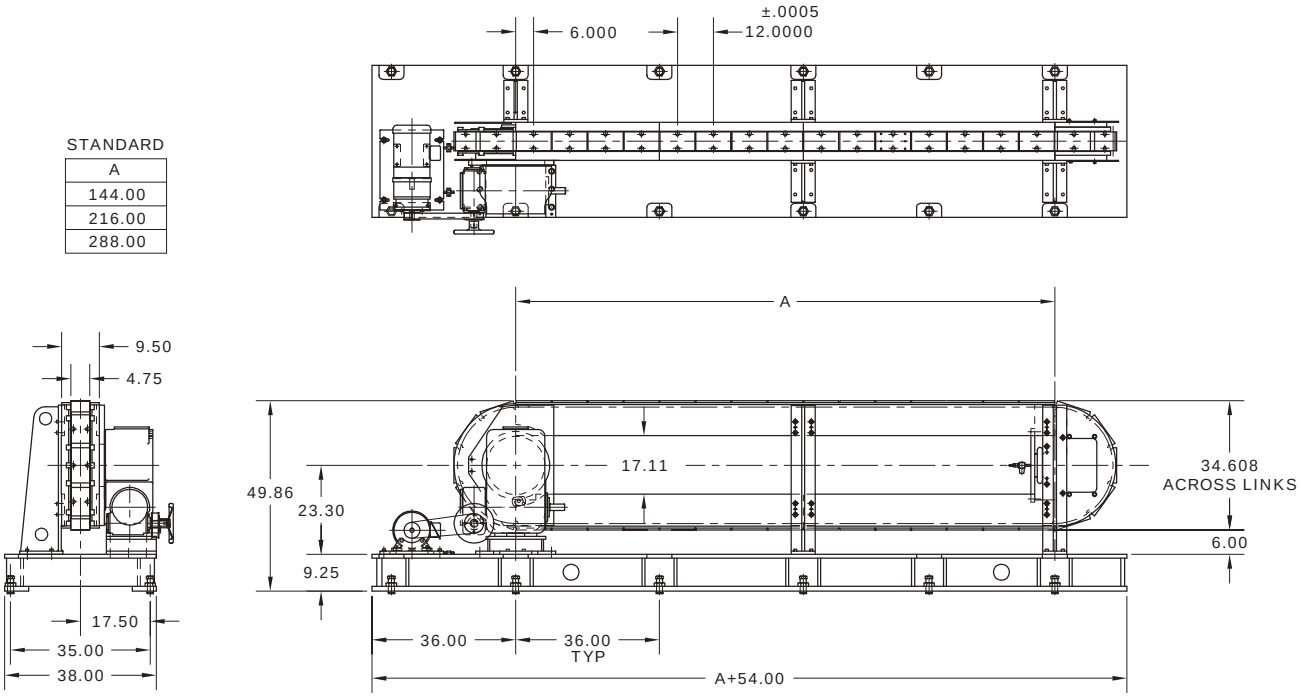

All dimensions are subject to change. For actual dimensions, please request the current drawing from IMC.

Ordering Procedure

The following ordering procedure is intended as a general guideline for the minimum information required when ordering a Precision Link Conveyor.

Your IMC Sales Agent will help you clearly specify any alterations you need to meet your design requirements.

Required Information

- **Link Size:** 1.5, 2.0, 3.0, 4.5, 6.0, 9.0 or 12.0
- **Type:** Table Top or Heavy Duty
- **Style:** Over/Under or Carousel
- **Length:** Standard per catalog or Custom, expressed as center distance, in inches
- **Height:** Standard per catalog or Custom, in inches

Required Information when ordering Drive Package

- **Type:** Standard, Alternate, Heavy-Duty or Special
- **Drive Side:** 1 or 2 (for Over/Under)
- **Index Distance:** In inches
- **Indexer Model:** Specific model number or special

Technical Assistance

All Precision Link Conveyor applications are verified by a IMC sales agent using the IMC Sizing Program.

Your IMC agent is available to make all sizing calculations for you.

Servo-Mechanical Drives

IMC
INDUSTRIAL MOTION CONTROL, LLC.
CAMCO FERGUSON

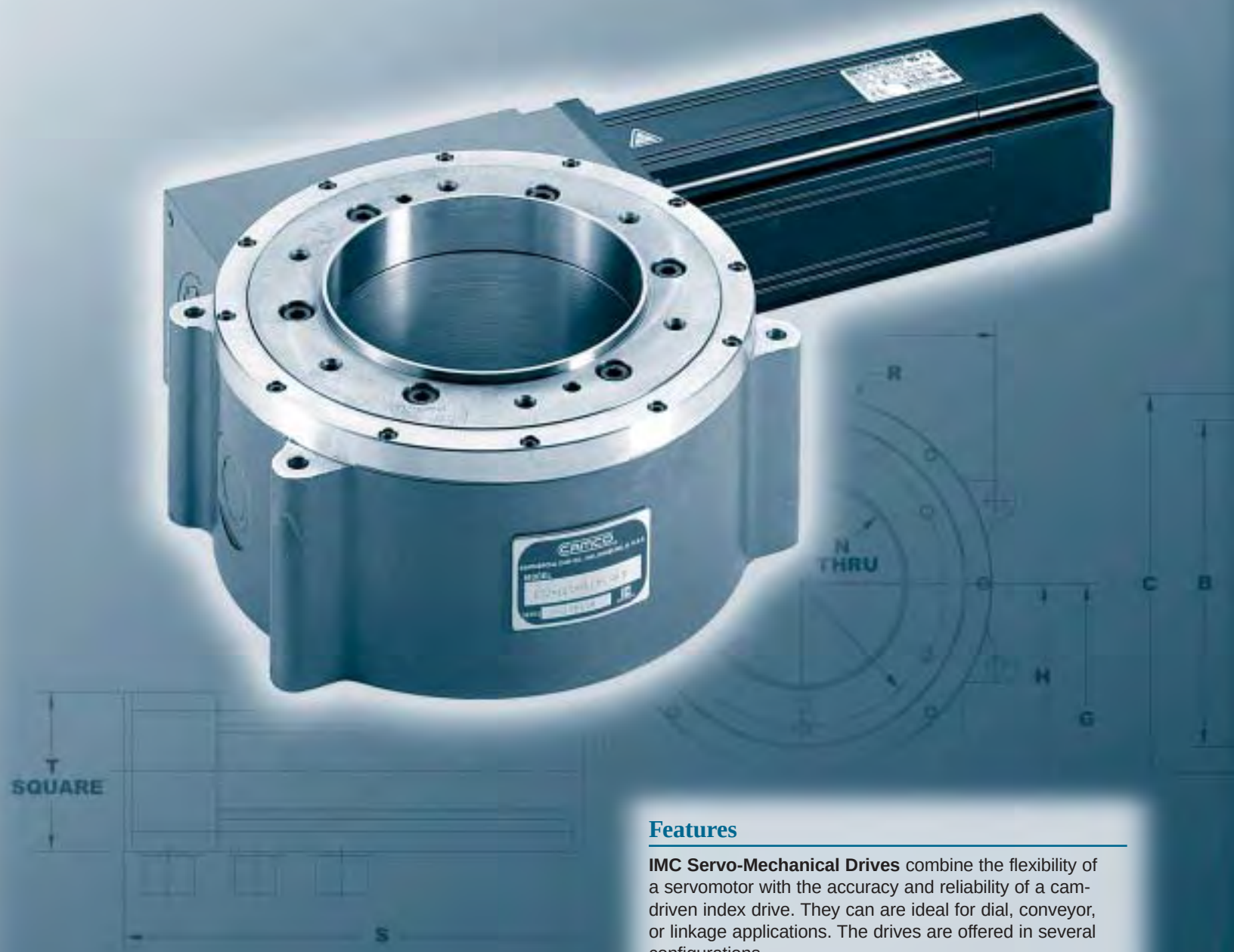

Features

IMC Servo-Mechanical Drives combine the flexibility of a servomotor with the accuracy and reliability of a cam-driven index drive. They can are ideal for dial, conveyor, or linkage applications. The drives are offered in several configurations

- The **Flex-i-Dex** drive is a dedicated Servo-Mechanical package complete with servomotor and amplifier ideal for light duty applications or short, fast movements.
- **Constant Lead** cam drives are standard RDM or Heavy Duty E-Series drives with constant lead (constant ratio) cams. Supplied with or without a reducer and servomotor package, they offer a large mounting surface, bearing support and thru-hole. Supply your own servo package or use ours.

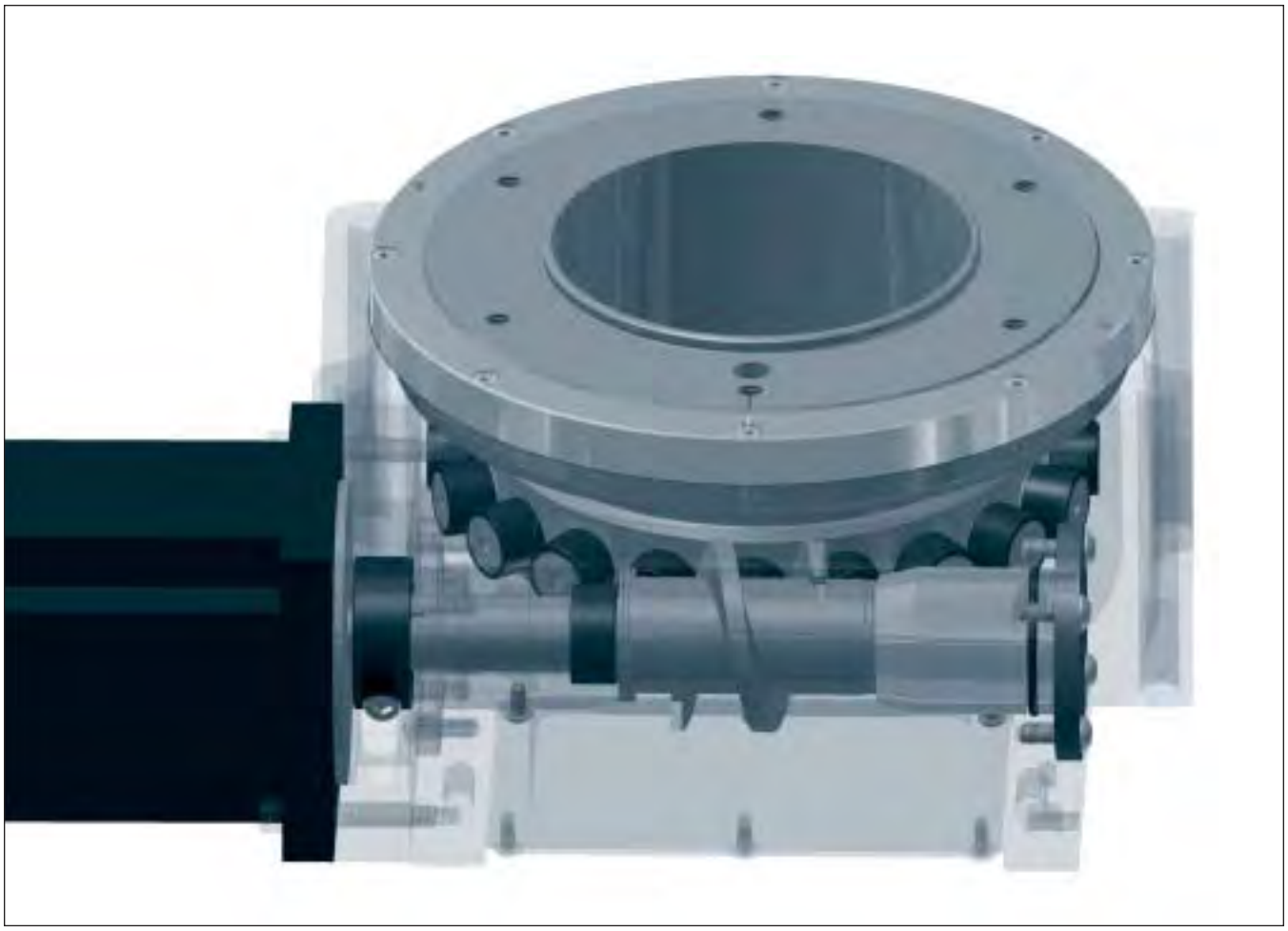

K

Servo-Mechanical Drives

The Servo-Mechanical Drive is a zero-backlash, high-efficiency, long-life, low-maintenance precision rotary actuator. The actuator consists of an IMC indexer with a constant ratio cam and a servomotor. A secondary reducer may be added for applications requiring a very slow movement, extra mechanical advantage or motor inertia matching. The Servo-Mechanical Drive features:

- **Large Output Flange and Bearing** with metric or imperial tapped holes for fastening the load.
- **Large Center Hole** for a stationary center post or to run air, hydraulic or electric lines.
- **Output shaft with precision cam followers** meshes with a hardened and ground cam. The cam is made with a fixed ratio from 2:1 to 24:1. Low ratios are recommended for large angular movements while high ratios are used for small, fast movements.
- **Zero Backlash** is produced by preloading the cam followers against the cam surface.
- **High Efficiency** due to cam followers rolling (not sliding) on the cam while submerged in oil.
- **Clamped or dowel-pinned joints** eliminate backlash caused by worn keys. Keys are used for timing and assembly purposes only.
- **Servomotor mounted directly to the camshaft.** The motor shaft is inserted into the hollow bore of the split camshaft. A locking clamp collar joins the motor shaft to the camshaft.
- **Secondary reducers** have minimum backlash and NEMA or IEC frames for mounting the servomotor.

The Servo-Mechanical Drive is the ideal unit for applications where flexibility, electronic synchronization, digital communication and high accuracy and repeatability are needed.

Flex-I-Dex

The Flex-i-Dex is ideal for light duty applications or short, fast movements. The complete Flex-i-Dex package includes:

- Flex-i-Dex constant-lead (constant ratio) drive with either a large flange output or a shaft output.
- Control Techniques Servo Motor, Uni-Drive SP controller, power and logic cables and Power Tools software.

Flex-i-Dex with Dial/Flange Output

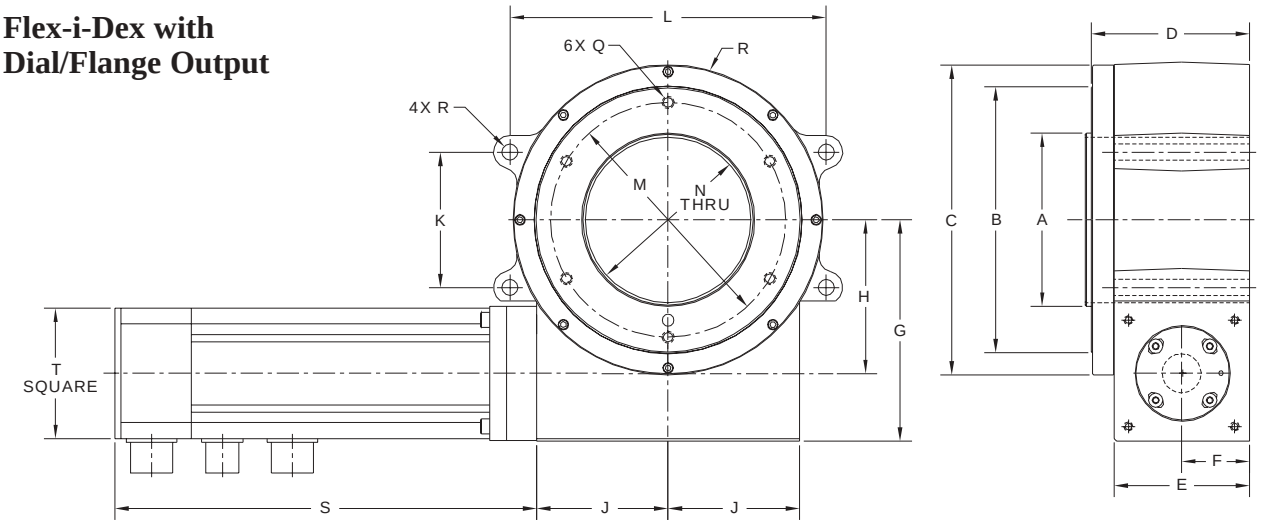

Dimensions – Flex-i-Dex with Dial/Flange Ouput																	
Model	A	B	C	D	E	F	G	H	J	K	L	M	N	Q	R	S	T
DSD-102	115	176	206	105	90	45	147	102	87.5	90	210	156	110	M8x16	10.7	280	89
DSD-150	170	270	310	145	130	65	212	150	125	140	310	215	160	M10x20	12.7	287	115

Flex-i-Dex with Shaft Output

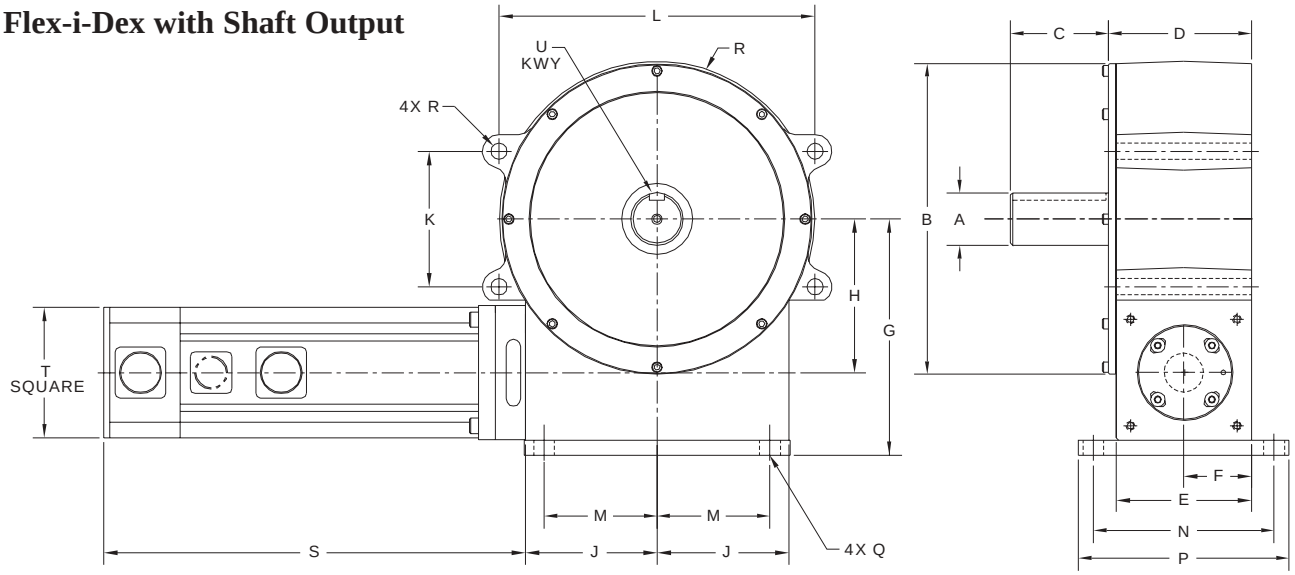

Dimensions – Flex-i-Dex with Shaft Ouput																		
Model	A	B	C	D	E	F	G	H	J	K	L	M	N	Q	R	S	T	U
DSD-102S	35 h7	206	65	95	90	45	157	102	87.5	90	210	75	120	10.7	10.7	280	89	10x5 (N9)
DSD-150S	45 h6	310	85	135	130	65	227	150	125	140	310	105	160	12.7	12.7	387	115	14x5.5 (N9)

All dimensions are subject to change. For actual dimensions, please request the current drawing from IMC.

For heavier applications IMC has complete package solutions using the RDM Series or E-Series Drives with constant lead (constant ratio) cams. These are available as a complete solution including the servo package or as the mechanical platform only.

Complete Package

IMC can provide a complete servo-driven solution consisting of the mechanical assembly, servomotor and controller. All IMC complete packages are supplied with Control Techniques Servo Motors (up to 14.57 hp or 10.87 kW), Uni-Drive SP controller, power and logic cables and Power Tools software as standard.

Basic Mechanical Platform

The mechanical platform uses the RDM or E-Series cam-operated drive alone or with a reducer. You can use your preferred servomotor, amplifier and controller to drive the unit. An IMC sales or applications engineer can size and select the right cam drive for your application. As a preliminary guide for motor or reducer sizing please refer to the charts on pages K-4 and K-6 for the shaft and flange sizes as well as the minimum motor RMS torque or reducer rating (Assembly Torque on page K-8) required for each.

Servo-Driven RDM

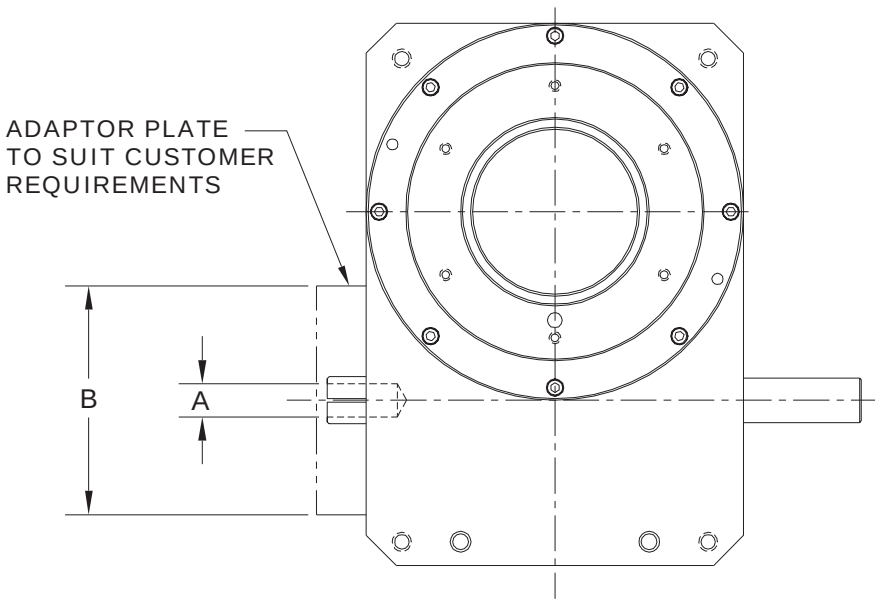

RDM WITH EXTENDED
CAMSHAFT FOR MOTOR

Dimensions – Servo-Driven RDM

Model	Assembly Torque in-lb (Nm)	A Reducer or Motor Shaft Maximum Diameter in. (mm)	B Reducer or Motor Maximum Flange in. (mm)
80RDM	30 (3.4)	0.55 (14)	3.86 (98)
601RDM	30 (3.4)	0.55 (14)	3.86 (98)
902RDM	90 (10)	0.87 (22)	5.12 (130)
1100RDM	180 (20)	1.26 (32)	7.09 (180)
1305RDM	300 (34)	1.26 (32)	8.66 (220)
1800RDM	650 (73)	2.17 (55)	13.31 (338)

All dimensions are subject to change. For actual dimensions, please request the current drawing from IMC.
For RDM drive dimensions see section B of this catalog.

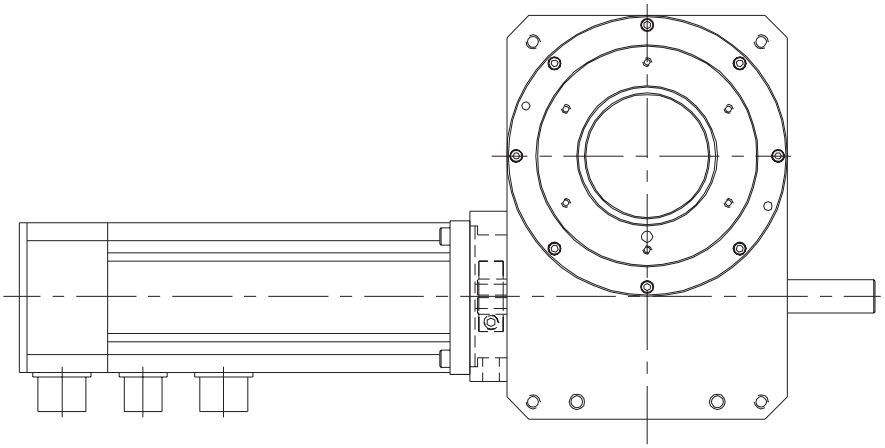

RDM WITH MOTOR
DIRECTLY CONNECTED

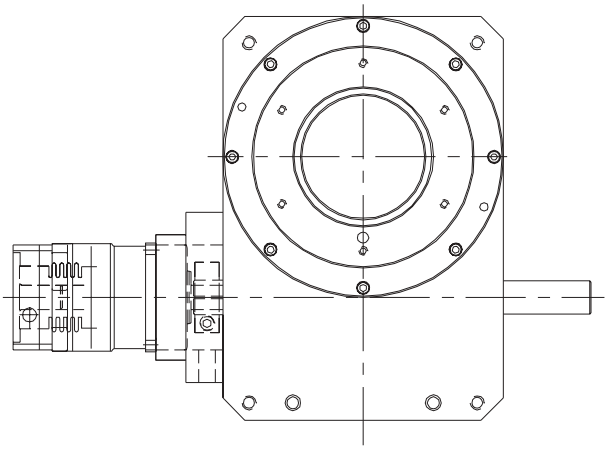

RDM WITH INLINE PLANETARY
REDUCER (NO MOTOR)

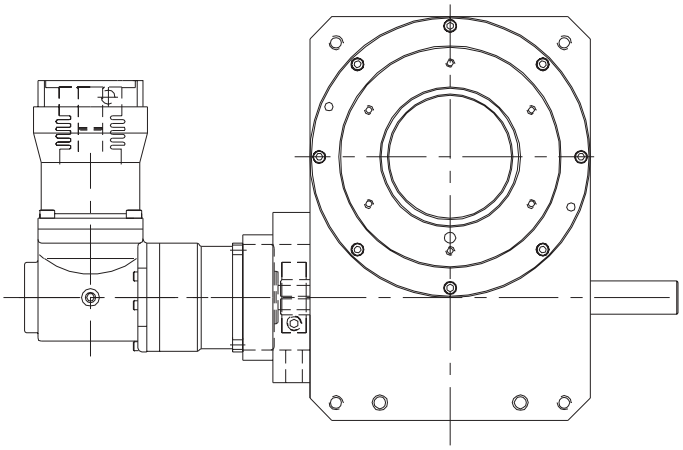

RDM WITH RIGHT ANGLE PLANETARY
REDUCER (NO MOTOR)

Servo-Driven Heavy-Duty E-Series

For heavy-duty applications, the E-Series drive can be supplied with a constant lead (constant ratio) cam, with or without the servo package.

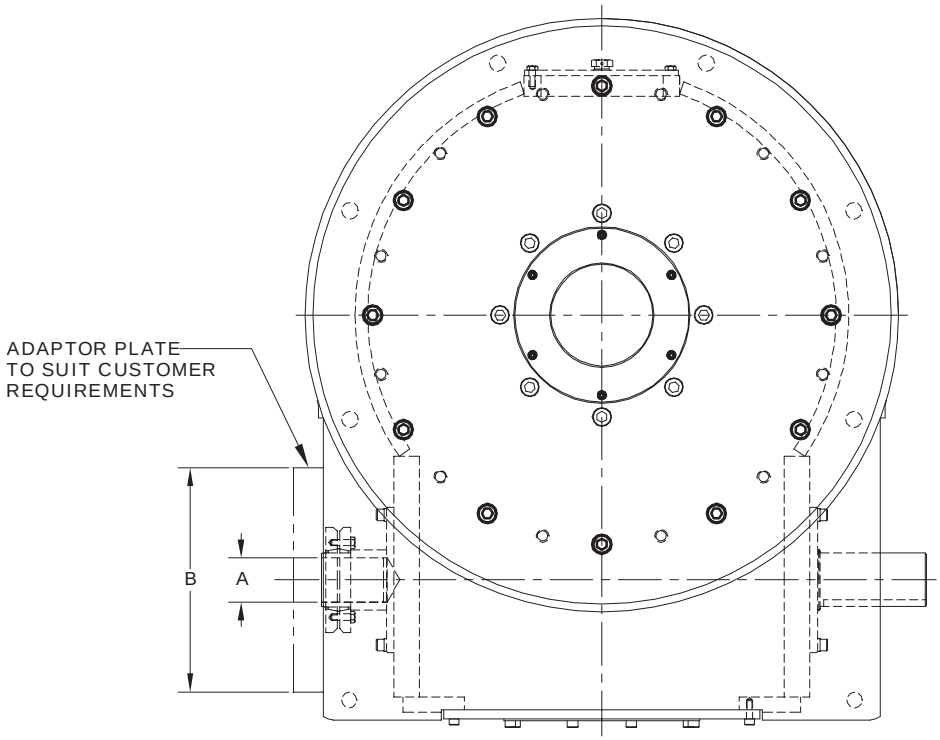

E-SERIES WITH EXTENDED
CAMSHAFT FOR MOTOR

K

Dimensions – Servo-Driven Heavy-Duty E-Series

Model	Assembly Torque in-lb (Nm)	A Reducer or Motor Shaft Maximum Diameter in. (mm)	B Reducer or Motor Maximum Flange in. (mm)
750E	650 (73.45)	2.17 (55)	7.36 (187)
950E	650 (73.45)	2.17 (55)	6.61 (168)
1150E	1100 (124.29)	2.95 (75)	8.15 (207)
1550E	1550 (175.14)	2.95 (75)	7.24 (184)
2050E	2000 (225.99)	3.35 (85)	12.99 (330)

All dimensions are subject to change. For actual dimensions, please request the current drawing from IMC.
For E-Series drive dimensions see section G of this catalog.

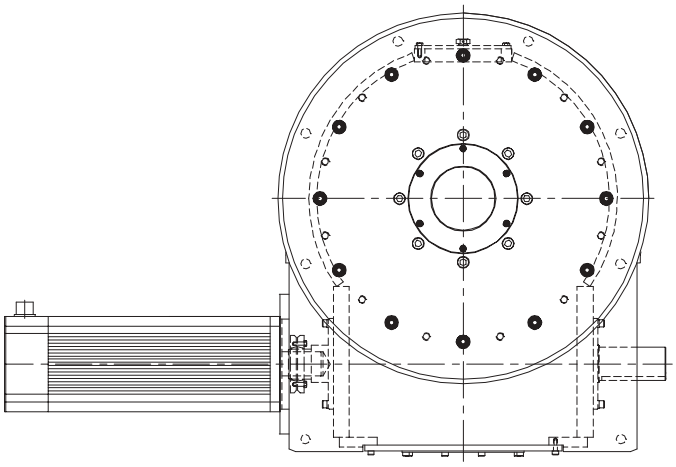

E-SERIES WITH MOTOR
DIRECTLY CONNECTED

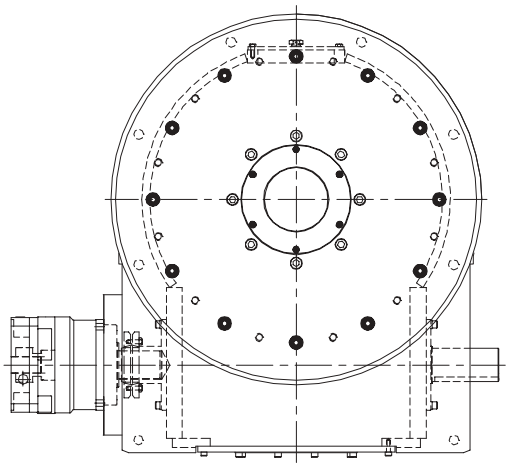

E-SERIES WITH INLINE
PLANETARY REDUCER (NO MOTOR)

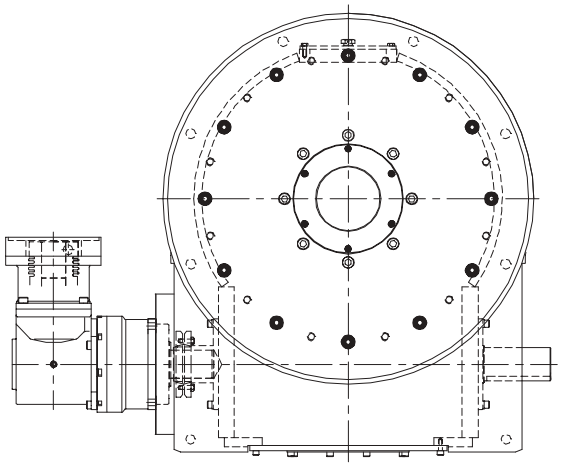

E-SERIES WITH RIGHT ANGLE
PLANETARY REDUCER (NO MOTOR)

Technical Specifications

Flex-i-Dex

	Units	DSD-102 DSD-102S	DSD-150 DSD-150S
Single Reduction Ratio	Integer	20:1	24:1
Maximum Inertia on Output Dial	lb-in^2	10,000	100,000
Inertia reflected at Input Shaft	lb-in^2	1.25	5.87
Assembly Torque	in-lb	25	45
Maximum Axial Load	lbs	2,270	8,850
Maximum Radial Load	lbs	910	3,540
Maximum Offset Load	in-lb overturning moment	3,180	17,750
Dial Flatness	inches TIR	0.002	0.002
Axial Run-Out	inches	0.0015	0.0015
Accuracy	arc seconds	±30	±30
Repeatability	arc seconds	±7	±7

RDM

	Units	80RDM	601RDM	902RDM	1100RDM	1305RDM	1800RDM
Reduction Ratio Range	Integer	2:1 to 24:1	2:1 to 24:1	2:1 to 24:1	2:1 to 24:1	2:1 to 24:1	2:1 to 24:1
Maximum Inertia on Output Dial	lb-in^2	2,000	12,000	107,000	366,000	272,000	705,000
Inertia reflected at Input Shaft	lb-in^2	3	9	15	160	297	980
Assembly Torque	in-lb	30	30	90	180	300	650
Maximum Axial Load	lbs	1,818	2,267	8,840	20,180	11,639	14,524
Maximum Radial Load	lbs	729	909	3,535	8,069	4,646	5,836
Maximum Offset Load	in-lb overturning moment	1,814	3,186	17,700	24,213	34,957	61,065
Dial Flatness	inches TIR	0.002	0.002	0.002	0.002	0.002	0.002
Axial Run-Out	inches	0.0015	0.0015	0.0015	0.0015	0.0015	0.0015
Accuracy	arc seconds	±55	±39	±30	±21	±30	±17
Repeatability	arc seconds	±18	±13	±5	±5	±5	±4

E-Series

	Units	750E	950E	1150E	1550E	2050E
Reduction Ratio Range	Integer	2:1 to 32:1	2:1 to 32:1	2:1 to 32:1	2:1 to 32:1	2:1 to 32:1
Maximum Inertia on Output Dial	lb-in^2	2,152,000	4,544,000	11,522,000	28,764,000	86,250,000
Inertia reflected at Input Shaft	lb-in^2	3,520	11,200	17,255	63,700	363,100
Assembly Torque	in-lb	650	650	1,100	1,550	2,000
Maximum Axial Load	lbs	41,934	75,742	85,351	119,850	159,724
Maximum Radial Load	lbs	29,161	52,530	58,939	82,477	109,595
Maximum Offset Load	in-lb overturning moment	419,490	977,482	1,408,920	2,903,685	4,342,695
Dial Flatness	inches TIR	0.005	0.005	0.005	0.005	0.005
Axial Run-Out	inches	0.005	0.005	0.005	0.005	0.005
Accuracy	arc seconds	±26	±23	±15	±11	±7
Repeatability	arc seconds	±6	±5	±3	±2	±1

Accessories

IMC
INDUSTRIAL MOTION CONTROL, LLC.
CAMCO FERGUSON

IMC offers a variety of accessories to complete your automation package.

- AC Inverter Duty Motors and Drives
- DC Motors and Motor Controls
- Digi-Dog Electronic Limit Switch
- Camtronics Rotary Limit Switch
- Clutch-Brakes
- Spare Parts

AC Drives

The IMC AC Inverter Drive System is a high performance, cost effective alternative to DC drives, clutch-brakes and brake motors. Positioning is achieved using a photoeye with a reaction time of less than 1 ms. Once stopping position is set, the drive will automatically adjust for any speed differences with an extremely low margin of error. The special algorithms used in the drive make it the most accurate and dependable indexing drive for your applications.
AC Drive features include:

- Up to 60 cycles per minute (1/3 and 1 hp)
- Sophisticated inverter designed for indexing applications
- Adjustable set speed with fixed stopping position
- Tight, repeatable accuracy
- Simple, easy to use programming
- Bi-directional
- PLC/PC communication
- CE, UL conformance
- Uses standard 3 phase AC motors or low profile, high power motors designed for indexing applications
- IP20 Enclosure
- 230V single phase or 460V 3 phase

DC Drives

IMC DC Motors and Drives offer efficient, low-cost cycle-on-demand control for up to 30 cycles per minute. These motors and controls have variable speed capability for control of indexing rates and automated motor cycling for variable dwell periods. IMC's Varipak DC drive includes:

- **Current Limiting** protects the drive system from overloads and provides smooth acceleration of high inertia loads.
- **NEMA 12 Enclosure** is removable for chassis mounting
- **External Control Terminal Strip** allows for Cycle Start, Cycle Stop and Jog from Relay-PLC interface.
- **Line Regulation** – the control is unaffected by voltage fluctuations. Set speed will vary less than 1%, ensuring consistent drive system output.
- **Transient Protection** of power components against line voltage spikes with voltage clamping MOV's and RC networks.
- **Load Regulation** – 5% of base speed accuracy with armature feedback. Results in consistent machine output regardless of load conditions.

Digi-Dog

The Digi-Dog is a digitally programmable rotary limit switch based upon resolver technology and EEPROM memory. The Digi-Dog is easily programmed using the operator display. Process times and sequences can be optimized in much less time when compared to other devices. The panel mount allows debugging to occur at a safe distance from the machine. The

Digi-Dog is ideal for applications where several positions require signaling such as Parts Handlers with multiple dwells.

- LCD Displays Position, Output Status, and Setup Menus
- Easy Digital Adjustments of Outputs
- EEPROM Memory to Save Setup and Position during Power Loss
- Available with 12-Bit Single or Multi-Turn “Absolute” Resolver or 16-Bit Multi-Turn “Absolute” Resolver
- 4 or 8 Outputs (24-240 VAC or 5-60 VDC)
- 24 VDC, 120 VAC or 240 VAC Input Power
- LED Indicator Lights for Power Supply and Outputs
- Program Enable Switch to Prevent Unauthorized Programming
- Sealed NEMA 12 Enclosure
- Brad-Harrison Connector Available
- UL Listed #E-23556
- Shaft input on left or right side

Camtronics

Camtronics rotary cam limit switches have been designed for harsh industrial applications which require accurate and reliable shaft position sensing. They can be used as stand alone switching controls or as a shaft position sensor input to PLCs. The Camtronics uses a photo electric interrupter module to sense the positions – the rotary cams pass through the module and interrupt the circuit without mechanical contact. The method provides long life, high-speed operation and eliminates contact bounce found in mechanical systems. Features include:

- Long Life
- High Speed capability
- NEMA-12 Enclosure
- 4, 8, 12 or 16 switches
- CT-4000 series
  - — DC sinking outputs
  - — 12-30 VDC input and 200 mA output per switch
- CT-6000 series
  - — 115 VAC - does not require a power supply
  - — Plug- in AC or DC modules
  - — Replaceable plug-in fuses
  - — LED “output on” indicator

Reducers

IMC provides a variety of drive systems for indexers. IMC Sales Representative or Applications Engineers will recommend the best drive for your application.

- **Double-Enveloping Gear Reducers** provide high load capacity, smooth operation, long life and shock resistance. They are available in ratios of 5:1 to 60:1 with double-reduction models providing greater ratios. These reducers come with NEMA “C” face motor adapters and mount directly on the input shaft of the indexer ensuring constant camshaft speed.
- **Gear Motors** with integral reducer and AC motors are available in single or 2-speed models with optional brakes for cycle-on-demand applications and recovery from e-stops.

Clutch-Brakes

IMC offers Electric and Air Clutch-Brakes for DC applications where cycle rates exceed 30 cycles per minute. A clutch-brake is mounted between the motor and reducer and allows the motor to maintain its full RPM, eliminating the response time for motor to speed-up. With a compact, integrated design, the clutch-brake can be mounted directly between the motor and gear reducer with NEMA “C” face mounts.

Repairs and Spares

With proper maintenance, IMC products are reliable and long lasting. Occasional replacement of worn parts will keep your system running smoothly and accurately. IMC offers Spare Parts Kits for most products. These kits contain common parts including oil seals, input bearings and shims and can be supplied with additional parts such as cam followers. IMC can also repair your unit on site or it can be returned to our factory for complete inspection and replacement of worn parts. Service manuals for IMC products and accessories are available on the IMC website, www.camcoindex.com

IMC can present seminars at your plant on the proper maintenance or repair of your Camco or Ferguson equipment. In addition, IMC offers a preventive maintenance program. An IMC technician will inspect your equipment on-site and perform routine maintenance from greasing bearings to changing worn cam followers. Contact IMC at 847-459-5200 for more information.

TORQ/GARD™ Overload Clutches

INDUSTRIAL MOTION CONTROL, LLC.

CAMCO FERGUSON

Features

IMC's Torq/Gard overload clutches help protect the entire drive train of your machinery from damage due to excessive torque generated by overloads and jamming. Instant reaction when torque exceeds preset limits provides protection far superior to that of clutches employing friction surfaces. Torq/Gard features include:

- Modular Design: one unit for direct drive, chain drive or other power transmission options
- Universal Mounting: eliminates special bore requirements
- Single Position, Automatic Reset
- Reversible
- Torque Repeatability

Torq/Gard™ Features

SEALED FOR LIFE Gasket and O-ring sealed body, packed with high-performance, moisture resistant grease for outdoor and wash-down applications.

MAXIMUM SHAFT BORE Arranged to accommodate stock shaft bushings.

FORGED STEEL HUB Heat-treated with oversized bore.

PRECISION NEEDLE BEARINGS for years of wear-free service at lever arm pivot points.

FLAT WIRE HELICAL SPRING Maintains torque limit within narrow tolerance.

HEX-SOCKET HEAD TORQUE CONTROL Permits quick, easy adjustment of torque limit.

RUGGED ANTI-FRICTION CAM FOLLOWER Hardened, precision-ground tool steel.

DRILLED AND TAPPED MOUNTING LUGS Registered for plate sprocket or other output options.

ALLOY STEEL FORGED CAM One piece hard-ened steel cam and hub.

ALUMINUM HOUSING WITH INTERNATIONAL ORANGE FINISH.

HEAVY-DUTY NEEDLE BEARINGS for greater overhung load capacity.

Torq/Gard™ Sizing and Selection

Torq/Gard overload clutches are available in seven sizes with capacities trip torques from 13 in-lbs to 8000 in-lbs.

Torq/Gard Clutches may be sized using the Speed-Horsepower Chart, the Speed-Torque Chart and these formulas:

Torque (in-lb) = Horsepower (hp) x 63025 / RPM

Horsepower (hp) = Torque (in-lbs) x RPM / 63025

Tripping Torque (in-lbs) = Operating Torque x Service Factor

SPEED/HORSEPOWER CHART

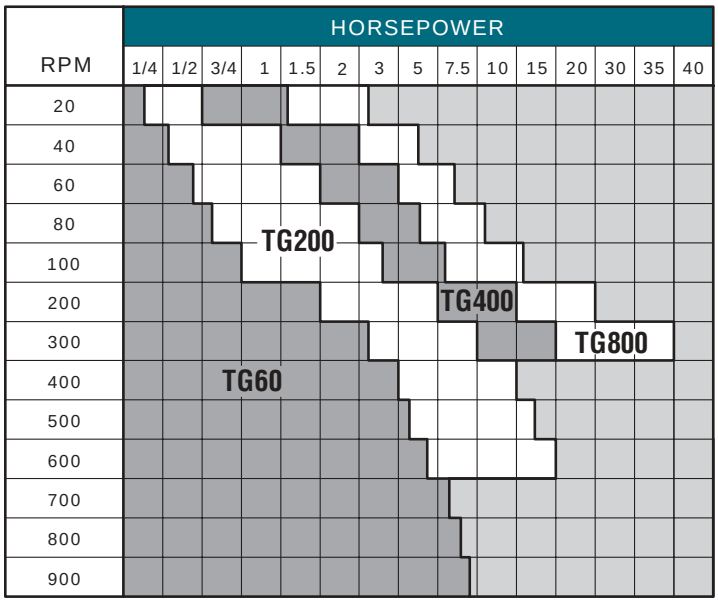

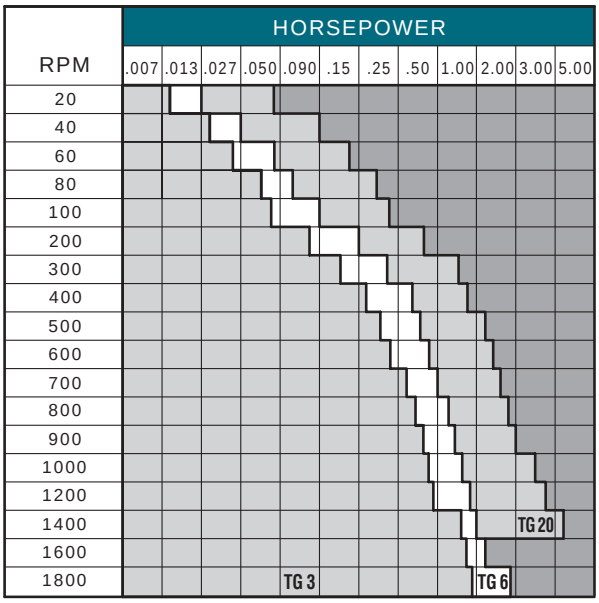

SPEED/TORQUE CHART

Model	Trip Torque (in-lbs) Min.	Trip Torque (in-lbs) Max.	HP Max	RPM Max	Weight (lbs)	Inertia (lb-in)	Maximum Bore Dia. (in)
TG3	13.3	32.7	1.5	1800	1.32	1.45	0.500
TG6	23	56.6	2.5	1800	1.32	1.45	0.500
TG20	56.6	204	4	1500	2.42	5.72	0.787
TG60	200	600	8.5	900	5.5	10	1 1/4
TG200	600	2000	21.5	680	12	46	1 15/16
TG400	2000	4000	22.2	350	38	455	2 7/16
TG800	4000	8000	44.4	350	38	455	2 7/16

Torq/Gard™ Dimensions

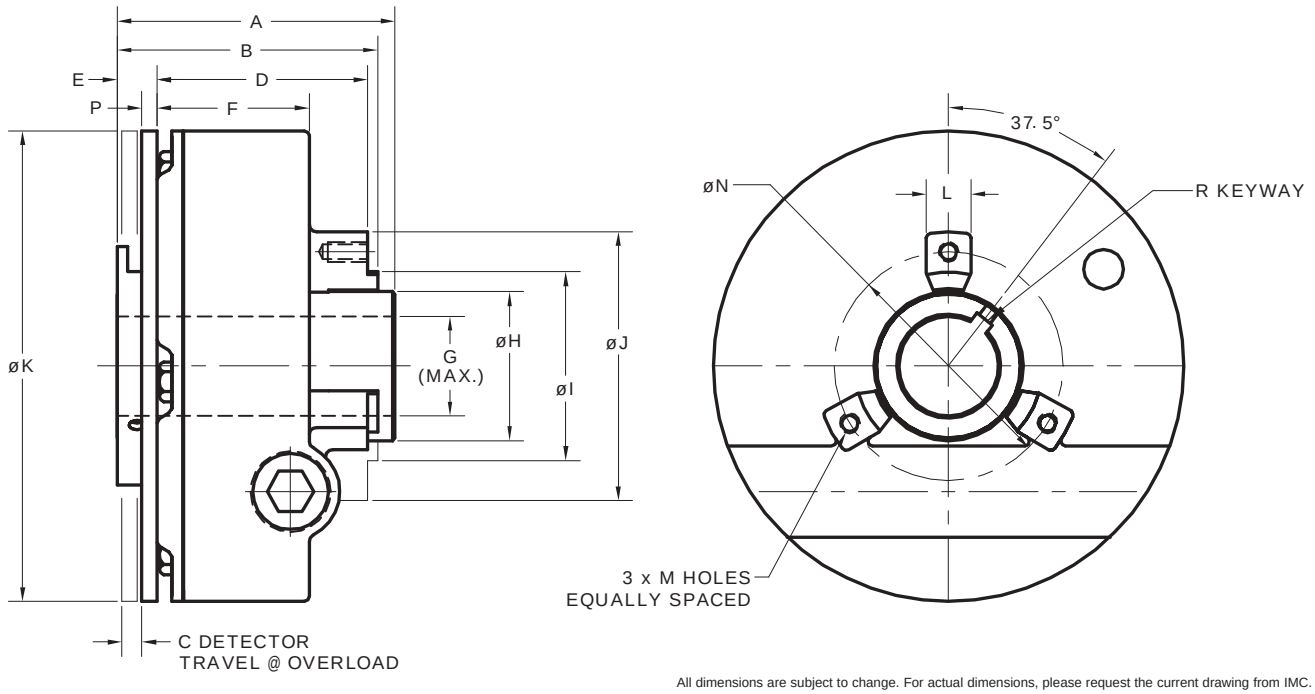

All dimensions are subject to change. For actual dimensions, please request the current drawing from IMC.

TORQ/GARD DIMENSIONS

Model	A	B	C	D	E	F	G	H	I	J	K	L	M	N	P	R
TG3	2.36	2.31	0.16	1.89	0.27	1.62	0.500	0.87	1.187	1.97	3.15	0.32	#8-32	1.575	0.12	0.125
TG6	2.36	2.31	0.16	1.89	0.27	1.62	0.500	0.87	1.187	1.97	3.15	0.32	#8-32	1.575	0.12	0.125
TG20	2.76	2.72	0.16	2.24	0.36	1.94	0.787	1.18	1.563	2.36	3.94	0.39	#10-24	1.965	0.12	0.188
TG60	3.50	3.28	0.25	2.67	0.49	1.97	1.250	1.88	2.375	3.38	5.25	0.56	.250-20	2.875	0.19	0.250
TG200	4.31	4.04	0.25	3.36	0.56	2.80	1.938	2.75	3.250	5.00	7.00	0.75	.375-16	4.500	0.19	0.500
TG400	6.19	6.14	0.31	5.17	0.62	3.80	2.438	3.50	4.500	7.50	10.75	1.12	.500-13	6.500	0.19	0.625
TG800	6.19	6.14	0.31	5.17	0.62	3.80	2.438	3.50	4.500	7.50	10.75	1.12	.500-13	6.500	0.19	0.625

Torq/Gard™ Application Considerations

The Torq/Gard should be used on the low speed side of a speed reducer in several ways:

- Direct Drive: The Torq/Gard can be mounting on the speed reducer output (low speed) shaft and directly connected to the driven machine using a Browning Ever-Flex half coupling and the Universal Adapter Plate.
- Chain Drive – Mounted on Speed Reducer Output: Mounting the Torq/Gard on the output of the gear motor or speed reducer with a roller chain connection to the driven machine provides the most economical clutch assembly. The Torq/Gard is designed to protect the weakest link in the drive system.
- Chain Drive – Mounted on Driven Machine: Mounting the Torq/Gard on the driven machine and powered through a chain and sprocket drive tends to absorb peak starting torques.
- **The Torq/Gard should never be used on the high speed side of a reducer**. Clutch sensitivity becomes a function of the reducer's gear ratio. As an example, when used with a 100:1 reducer, a 100 in-lb torque variation on the output side of the reducer will reflect only a 1 in-lb change on the input side. Do not exceed the maximum RPM shown in the Torq/Gard selection tables.

Custom Applications

IMC
INDUSTRIAL MOTION CONTROL, LLC.
CAMCO FERGUSON

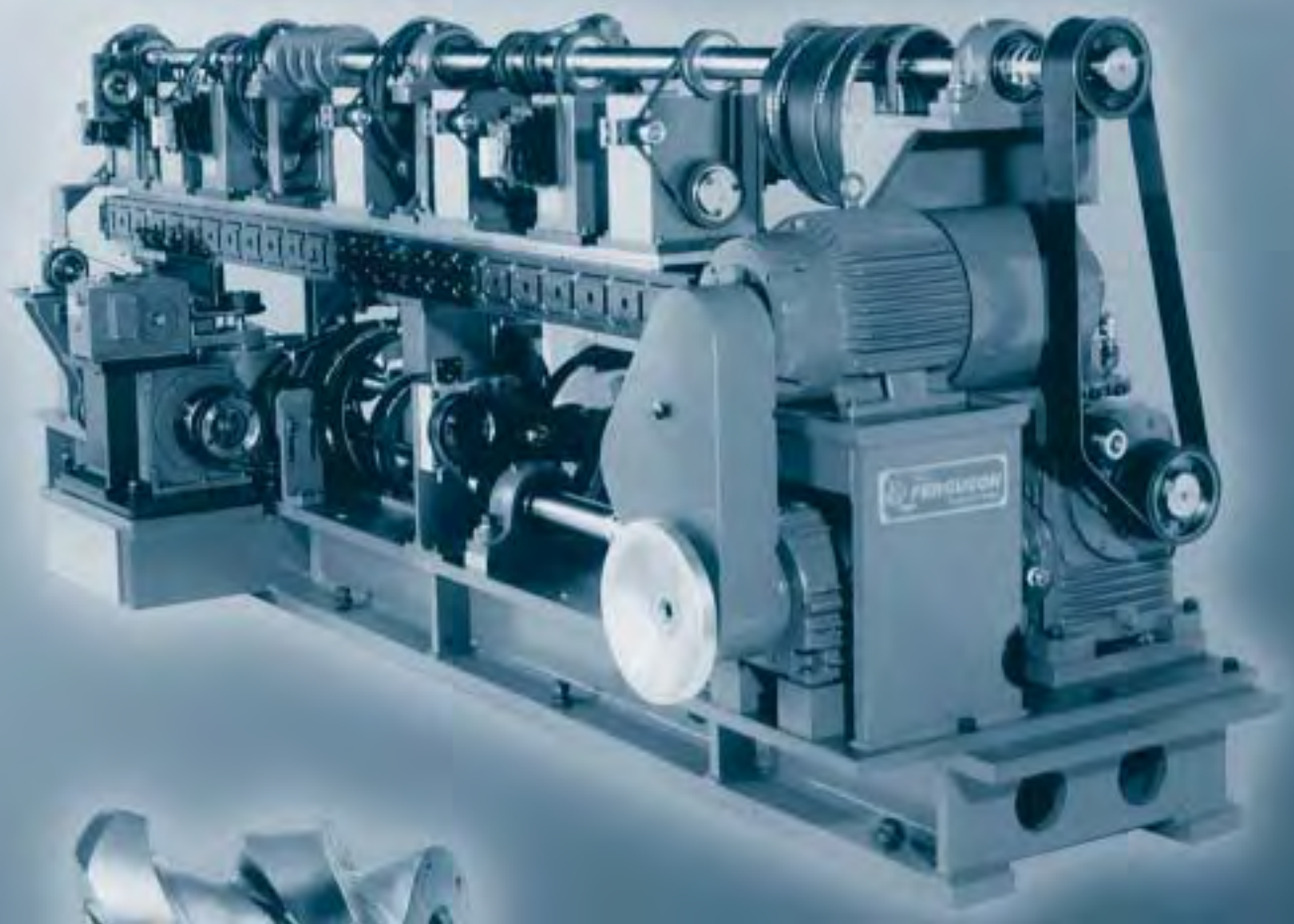

Industrial Motion Control provides expertise to customize Camco and Ferguson products for your applications including:

- Custom Cam manufacturing in a wide variety of sizes, materials and configurations
- Custom Cam design engineering
- Customization of IMC products or integration of IMC products with each other
- Custom Components: Cam and Followers Wheel supplied “without the box”

Custom Cams

IMC Custom Cams serve as an economical alternative to “in house” cam design, engineering and manufacturing. Backed by over 100 years of experience, we offer cams in a comprehensive range of configurations, tolerances and materials.

Our designers employ the most advanced computer technology available for detailed kinematic studies and dynamic analysis. In addition to common dimensional inspection, we perform computerized contour measurements with sophisticated, unique inspection equipment in both 2D and 3D.

Our commitment to applied engineering allows us to respond quickly to complicated manufacturing issues with specialized solutions that are precise, economical and engineered to your exacting specifications. Alternative materials, milling, and grinding techniques are explored to provide the best solution for your application at the most economical price.

To assist in your in-house cam design, you can download Clyde H. Moon’s “Cam Design Manual for Engineers, Designers, and Draftsman” from the IMC website, www.camcoindex.com.

Custom Cams are available in a variety of styles:

Plate Cams Popular, economical design used in low speed applications.	
Globoidal Cams Complex, tapered rib globoidal cams, commonly known as roller gear cams, are the heart of IMC's indexers. Controlled follower preloads increase follower life, speeds and accuracy for the ultimate solution in motion control.	
Face-Grooved Cams Medium speed cams using a groove slightly larger than the follower diameter providing minimal running clearance and reduced backlash.	
Conjugate Cams Dual cams controlling preloaded followers which provide higher speed capabilities and better accuracy.	
Barrel Cams Cylindrical cams which can be provided as an end cam, grooved type with minimal follower clearance or as a ribbed type utilizing preloaded followers for increased life and accuracy.	

Custom Machinery

IMC will work with your engineers to customize our products to your application including:

- Index Drives with Custom Motions
  - — Oscillating
  - — Matched Velocity
- Custom Dimensions
  - — Extended Shafts
  - — Special Mounting Hole Patterns
- Integration of IMC products such as Parts Handlers combined with Conveyor on a common base
- Custom Components: Cam and Follower wheel supplied “without the box”

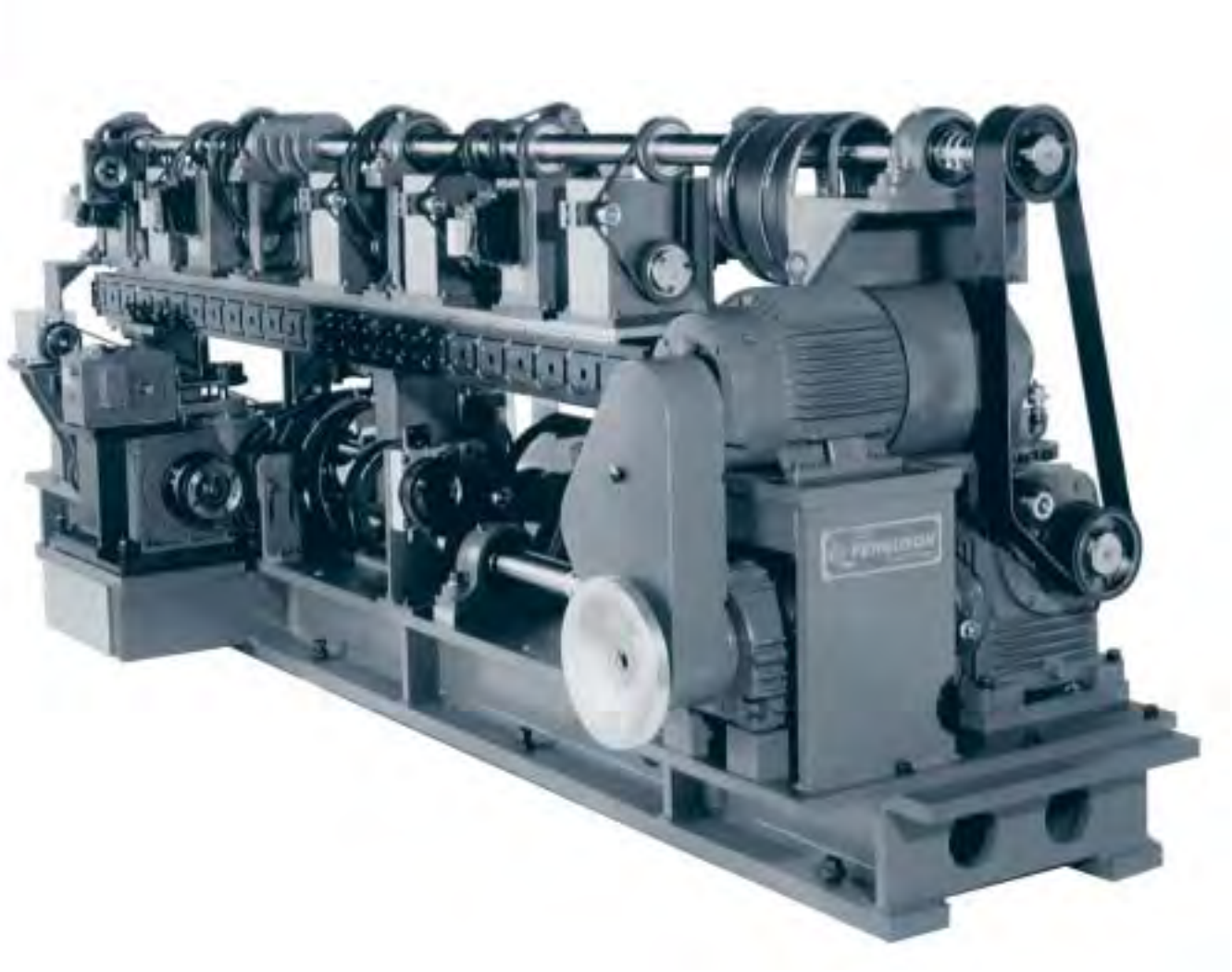

A DOVER COMPANY

PRECISELY POSITIONING OUR CUSTOMERS FOR PRODUCTIVITY.

Workholding

- Widest variety of workholding products
- High durability and reliability
- Flexible solutions for all applications
- Custom products for unique requirements

Automation

- Broad range of engineered automation products
- Complementary products for modular integration
- Unmatched accuracy, reliability and performance
- Unparalleled global sales, service and engineering support

DE-STA-CO GLOBAL LOCATIONS

NORTH AMERICA

DE-STA-CO Headquarters
Auburn Hills, Michigan
Tel: 1.248.836.6700
Marketing: marketing@destaco.com

Auburn Hills, Michigan
Tel: 1.888.DESTACO
Customer Service: cs-workholding@destaco.com
cs-automation@destaco.com

Wheeling, Illinois
Tel: 1.800.645.5207
Customer Service: camco@destaco.com

Charlevoix, Michigan
Tel: 1.888.DESTACO
Customer Service: cs-automotive@destaco.com

Red Wing, MN (Central Research Laboratories)
Tel: 651.385.2142
Customer Service: sales@centres.com

SOUTH AMERICA

Brazil
Tel: 0800-124070
Customer Service: samerica@destaco.com

ASIA

Thailand
Tel: +66-2-326-0812
Customer Service: info@destaco.com

China
Tel: +86-21-6081-2888
Customer Service: china@destaco.com

India
Tel: +91 80 41123421-426
Customer Service: india@destaco.com

EUROPE

Germany
Tel: +49-6171-705-0
Customer Service: europe@destaco.com

France
Tel: +33-1-3996-5000
Customer Service: france@destaco.com

UK
Tel: +44-1902-797980
Customer Service: uk@destaco.com

Spain
Tel: +34-936361680
Customer Service: spain@destaco.com

Netherlands
Tel: +31-297285332
Customer Service: benelux@destaco.com

A DOVER COMPANY

Automation

Robohand FERGUSON
CAMCO

CAMCO Products

1444 South Wolf Road
Wheeling, IL 60090

Phone: 1.847.459.5200
Fax: 1.847.459.3064

Email: camco@destaco.com




Precisely positioning our customers for productivity.

0000-04/08